JOHN WAIHEE
GOVERNOR OF HAWAII

WILLIAM W. PATY, CHAIRPERSON
BOARD OF LAND AND NATURAL RESOURCES

DEPUTIES

LIBERT K. LANDGRAF
MANABU TAGOMORI
RUSSELL N. FUKUMOTO

AQUACULTURE DEVELOPMENT PROGRAM
AQUATIC RESOURCES
CONSERVATION AND ENVIRONMENTAL AFFAIRS
CONSERVATION AND RESOURCES ENFORCEMENT
CONVEYANCES
FORESTRY AND WILDLIFE
LAND MANAGEMENT
STATE PARKS
WATER AND LAND DEVELOPMENT

STATE OF HAWAII
DEPARTMENT OF LAND AND NATURAL RESOURCES
P. O. BOX 621
HONOLULU, HAWAII 96809

GEOTHERMAL WELL DRILLING PERMIT

SCIENTIFIC OBSERVATION HOLE (SOH) 4

(AMENDED)

TO: Research Corporation of the
University of Hawaii (RCUH)
Hawaii Natural Energy Institute (HNEI)
University of Hawaii at Manoa
2540 Dole Street, Holmes Hall #246
Honolulu, Hawaii 96822

In accordance with Administrative Rules 13-183, your original application, dated March 7, 1989, as amended by your letter dated August 17, 1989, for a permit to drill a scientific observation hole on lands included in the Kamaili Section of the Kilauea Lower East Rift Geothermal Resource Subzone is approved:

Well Designation: SOH 4
Location: TMK 1-2-10:01, Kamaili, Puna, Hawaii
Ground Elevation: 1,220 ft.±
Bottom Hole Diameter: 3 inches
Total Depth: 4,000 to 6,500 feet (maximum)

You are hereby granted permission to drill the geothermal scientific observation hole described above and in your application in accordance with the Department's Administrative Rules, Chapter 13-183, and the following conditions:

(1) All work shall be performed in accordance with the permission and terms of the occupier of the land, the Drilling and Completion Procedures submitted with your application, the Department's Administrative Rules (Chapters 13-183 and 13-184), and all other applicable Federal, State, and County laws, ordinances, rules and regulations;

(2) The applicant, its successors and assigns, shall indemnify and hold the State of Hawaii harmless from and against any loss, liability, claim or demand for property damage, personal injury and death arising out of any act or omission of the applicant, assigns, officers, employees, contractors and agents under this permit or relating to or connected with the granting of this permit;

(3) The applicant shall observe and comply with all valid requirements of municipal, state, and federal authorities, and regulations pertaining to the lands and permittee's operations including, but not limited to, all water and air pollution control laws, and those relating to the environment;

(4) The applicant shall secure approval and issuance of a County Geothermal Resource Permit (GRP) from the Planning Commission prior to commencement of drilling activities;

(5) If there are any contemplated changes in the proposed drilling program, the applicant shall obtain the Chairperson's approval prior to the execution of any such contemplated changes of work;

(6) The applicant shall file with the Chairperson prior to the start of the permitted activity, an indemnity bond as required under the Department's Administrative Rules, Chapter 13-183;

(7) The SOH shall be located more than 100 feet from the outer boundary of the parcel of land on which the well is situated, or more than 100 feet from a public road, street, or highway dedicated prior to the commencement of drilling unless modified by the Chairperson upon request;

(8) When drilling has reached a depth of not more than 50 feet below sea level, the Department's representative shall be notified with reasonable time allowed for travel to the site, to obtain a representative groundwater sample and to measure the static water level;

(9) The SOH surface casing (9.625") shall be set to a minimum depth of ten percent of the proposed total depth of the well or five hundred feet, whichever is greater.

(10) All Blowout-Prevention Equipment (BOPE) and cemented casing strings, shall be pressure tested before commencing any other operations on the well. Test pressures shall not be less than 600 pounds per square inch nor greater than 1,500 pounds per square inch, and shall be applied for a period of thirty minutes.

(11) The drilling permit shall be valid for a period of one year from the date of issuance;

(12) The applicant shall submit to the Chairperson, the results of the exploration, all drilling and testing records, date of completion, and a survey of the hole location by a Hawaii licensed surveyor within six months after completion of the SOH operations;

(13) The applicant shall notify the Division of Water and Land Development of the date of the start of work;

(14) During use of the SOH for monitoring purposes, the hole and site shall be properly maintained until the well is plugged and abandoned in accordance with Administrative Rules, Chapter 13-183;

(15) The site shall be restored as near as possible to their original condition after operations are completed.

WILLIAM W. PATY, Chairperson
Board of Land and Natural Resources

AUG 31 1989

Date of Permit

cc: Land Board Members
Hawaii County Planning Dept.
DBED
Department of Health
OEQC

RECEIVED
89 AUG 21 AM 8:57

University of Hawaii at Manoa

Hawaii Natural Energy Institute
Holmes Hall 246 • 2540 Dole Street • Honolulu, Hawaii 96822

DIV. OF WATER &
LAND DEVELOPMENT

August 17, 1989

Mr. Manabu Tagamori
State of Hawaii
Department of Land and Natural Resources
Kalanimoku Building
1151 Punchbowl Street
Honolulu, Hawaii 96809

Re: Scientific Observation Hole (SOH) Program
Drilling Permit Amendment: SOHs 1, 2, 3, 4, 5m, and 6m

Dear Manabu:

Through mediation of the County of Hawaii's Geothermal Resources Permit, we have modified the casing and cement designs. In effect, our original two-stage cement casing design has been expanded to a three-stage cement casing design with an optional fourth stage, if warranted conditions prevail. The enclosed drilling program details the casing and cement plans with blowout prevention equipment designs.

These amendments have been approved by the community through mediation and we feel will more than satisfy the State's drilling regulations. Please feel free to call me at 522-5613, or in my absence, Art Seki at 948-8788, if you require additional information.

Sincerely yours,

Harry J. Olson
Hawaiian Electric Industries/
Spark Matsunaga Fellow in
Geothermal Energy Research

Enclosures: Amended Drilling Plans

cc: A. Seki

Scientific Observation Hole Program

SOH-4

Drilling Permit Amendment

DRILLING PROGRAM
Hawaii Scientific Observation Hole Program
Prepared for
Hawaii Natural Energy Institute
by
John E. Deymonaz
Geothermal Consultant

General

The following drilling program is for a series of observation holes to be drilled on the islands of Hawaii and Maui. The wells are designed for observation purposes only and not for the discharge of geothermal fluids. A combination of rotary and core drilling methods will provide the maximum flexability to handle the variety of anticipated drilling conditions.

Casing and cementing programs and the blowout prevention ("BOP") equipment to be used will provide protection from any potential overpressured zones and allow the hole to be shut in at any stage during the drilling after the upper 100 feet of conductor casing is in place. The BOP equipment will conform to or exceed specifications in Title 13, Chapter 183-74.

Below 100 feet continuous core will be taken. This will provide invaluable information for determining the nature of loss-of-circulation zones, fracturing, permeability, rock type and reservoir characteristics. With this information, in addition to mud and down-hole temperatures and surface elevation, casing points and intervals requiring spot cementing will be determined on a hole-by-hole basis as the drilling progresses.

Drilling Plan

Phase 1: Conductor Casing

1. Drilling for, and installing conductor casing will be performed with either the Universal 5000 drilling rig or by a local cable drilling contractor.

2. Move drilling rig on site, rig up and drill a minimum 16.5 inch diameter hole from surface to 100 feet. Hole may be deepened if competent formation is not encountered by 100 feet.

3. Set 13.375 inch, K-55, 61 lb/ft casing from surface to total depth ("TD").

4. Cement annulus from surface to TD with approximately 60 cubic feet of 7-sack Redimix concrete (7 sacks Portland cement per cubic yard with 1 inch minus gravel.)

Phase 2: Surface casing

1. Install a 12 inch Series 900 (3,000 psi) wellhead flange, a 12 inch 3,000 psi hydraulic double-gate preventer with pipe and blind rams and a high speed rotating head. Wellhead flange will have 2 inch choke-kill lines, with 3M (3,000 psi) 2 inch gate valves, connected to the mud pump (see Figure 2).

2. Test BOP equipment to 200 psi for 20 minutes. Repeat test for both pipe and blind rams.

3. Core drill from casing shoe to 400 - 1,000 feet with CHD-134 coring equipment (5.35 inch hole). Depth of each hole will be determined by hole conditions, surface elevation, lithology and bottom hole temperatures. Drilling fluids will be contained in above ground tanks.

4. Open hole to 12.25 inch diameter using rotary hole opener.

5. Run 9.625 inch, K-55, BT&C, 40 lb/ft casing with float shoe and centralizers to TD.

6. Condition hole by circulating through casing.

7. Cement through casing with Class G cement with 40% silica flour using services of a cementing company (ie. Halliburton, Dowell, BJ or equivalent).

Phase 3: Intermediate casing string #1

1. Core drill from float shoe to 1,000 - 2,000 feet with CHD-134 (5.35 inch hole) coring equipment. Depth on each hole will be determined by hole conditions, surface elevation, lithology and bottom hole temperatures.

2. Open hole to 8.5 inch diameter using rotary hole opener.

3. Run 6.625 inch, L-80, BT&C, 32 lb/ft casing with float shoe and centralizers to TD.

4. Condition hole by circulating through casing.

5. Cement through casing using API Class G cement with 40% silica flour using services of a cementing company.

6. Remove 12 inch BOP equipment.

7. Install a Series 900 (3,000 psi) wellhead flange with two 2 inch flanged outlets on the 6.625 inch casing. Choke/kill lines will be attached to the wellhead and have 3M (3,000 psi) 2 inch gate. Install BOP equipment consisting of a 6 inch gate valve (3,000 psi minimum), a 6 inch 3M LWP hydraulic double-gate preventer with pipe (rams for CHD-134, HQ and NQ rods will be on location) and blind rams, a 7 inch hydraulic annular preventer and high speed rotating head (see Figure 3).

8. Test pipe and blind rams to minimum of 1,000 psi for 20 minutes each. Test annular preventer to 500 psi for 20 minutes.

Phase 3-A: Intermediate casisng string #2. If hole conditions prevent setting 6.625 inch casing to a sufficient depth, an additional string of casing will be installed as follows:

1. Core drill from float shoe to 1,800 - 2,900 feet with CHD-134 (5.35 inch hole) coring equipment. Depth on each hole will be determined by hole conditions, surface elevation, lithology and bottom hole temperatures.

2. Cement CHD-134 drill rods in place by cementing through the drill rods with API Class G cement with 40% silica flour. Cement will overlap a minimum of 200 feet into the annular space between the CHD-134 drill rods and the 6.625 inch casing.

3. Upon completion of drilling operations, a mechanical cutter will be used to cut the CHD-134 drill rods above the 200 foot cement overlap and the uncemented portion of the string removed.

Phase 4: Coring and completion

1. Drill out of 6.625 inch casing with CHD-134 core equipment and complete hole to final TD of 4,000 - 6,500 feet. If Phase 3-A was utilized and CHD-134 rods are cemented in the hole, drilling will continue with HQ core drilling equipment (3.85 inch hole and 2.50 inch core).

2. If down hole formation conditions require temporary casing to continue drilling, the core drilling equipment can be "nested", stepping down from CHD-134 rods (5.00 inch O.D. x 4.125 inch I.D. in a 5.35 inch hole) to HQ (3.50 inch O.D. x 3.06 inch I.D. in a 3.85 inch hole) to NQ (2.75 inch O.D. x 2.38 inch I.D. in a 3.04 inch hole) and using each previous string of drill rods as temporary casing.

3. Complete hole by running 2.75 inch tubing (NQ drill rods) to TD. The tubing may be run inside CHD-134 or HQ drill rods to eliminate problems caused by unstable formation intervals in the hole. Maintain fluid level in hole by continual pumping of drilling fluid through kill line during all completion operations.

4. Pull drill rods.

5. Remove BOP equipment and install a Series 900 tubing head on the existing wellhead flange and cap with two 3M 3 inch gate valves to permit access. Install 3M 2 inch gate valves on each side of wellhead flange (see Figure 4).

6. Rig down and move equipment off location.

Drilling Fluids Program

Details of the drilling fluids program will be adjusted as drilling conditions change. The general program will be as follows:

100 - 1,000 feet:
Use extra high yield bentonite for viscosity. Maintain weight at 8.5+ lbs/gal and viscosity at 40 - 50 seconds. Loss of circulation will be controlled with the use of fiberous materials such as cottonseed hulls, Multi-Seal, sawdust or locally available materials. Spot cementing may be necessary in severe intervals.

1,000 feet to TD, mud temperatures less than 300 F:
Use extra high yield bentonite and liquid polymer for viscosity. Control loss of circulation with fiberous materials or spot cementing.
Concentrations:

Bentonite	5 - 10 lbs/bbl
Liquid Polymer	0.2 - 0.5 lbs/bbl
Rings Out (or equivalent)	0.1 - 0.2 lbs/bbl

1,000 feet to TD, mud temperatures 300 F - 450 F:
Use small quantities of sepiolite with additions of Aquatex (or similar polymer) for yield point control and a drilling mud surfactant (DMS) to aid in even flow properties and rod vibration. Control loss of circulation with fiberous materials or spot cementing.
Concentrations:

Sepiolite	2 - 5 lbs/bbl
Aquatex	2 - 4 lbs/bbl
DMS	1 - 2 lbs/bbl
Oxygen scavenger	0.25 - 1.0 lb/bbl (above 400 F)

1,000 feet to TD, mud temperatures 450 F - 600 F:
Use high temperature polymer and oxygen scavenger. As temperatures increase, viscosity becomes more difficult to maintain. Control loss of circulation with fiberous materials or spot cementing.
Concentrations:

High temperature polymer	1.5 - 4 lbs/bbl
Oxygen scavenger	0.25 - 1.0 lbs/bbl

Note: Mud temperatures reflect actual mud temperatures in hole, not formation or geothermal fluid temperatures.

Monitoring

Temperature Measurements

Measurements of the return drilling fluid temperatures will be made with a continuous recording thermograph. While making bit changes and runs for core, bottom hole temperatures will be measured using a series of maximum recording thermometers, in pressure tight containers, lowered to the bottom of the hole.

Hydrogen Sulfide Monitoring

Although dangerous levels of hydrogen sulfide gases are not likely, a H2S safety system will be employed. A detector will be located at the base of the wellhead and a second detector near the fluid discharge line will sound visual and audio alarms if H2S gas is emitted from the well. Three Scott air packs will be kept on site for use by personnel if dangerous concentrations of H2S occur.

UNIVERSITY OF HAWAII
SOH casing program

Figure 1

Phase 1: Drill 16.5" hole from surface - 100 ft.
Run 13.375" K-55 61# casing
Cement with redimix

Phase 2: Drill 12.25" hole to 400 - 1,000 ft (depth to be determined by surface elev., hole temp., and drilling conditions)
Run 9.625" K-55 40# casing
Cement w/ Class G high temp. cmt.

Phase 3: Drill 8.5" hole to 1,000 - 2,000 ft (depth to be determined by surface elev., hole temp., and drilling conditions)
Run 6.625" L-80 32# casing
Cement w/ Class G high temp. cmt.

Phase 3-A If required: Drill 5.35" (CHD-134) hole to 1,800 - 2,900 ft (depth to be determined by surface elev., hole temp., and drilling conditions)
Cement CHD-134 drill rods in place and overlap cement 200 ft (min.) into 6.625 x 5" annulus)
Cement w/ Class G high temp. cmt.

Phase 4: Drill 3.85" hole (HQ) to 4,000 - 6,500 ft. If necessary, hole will be reduced to 3.04" (NQ).
Complete hole by hanging 2.75" 4.4# tubing (NQ drill rod) from surface to TD.

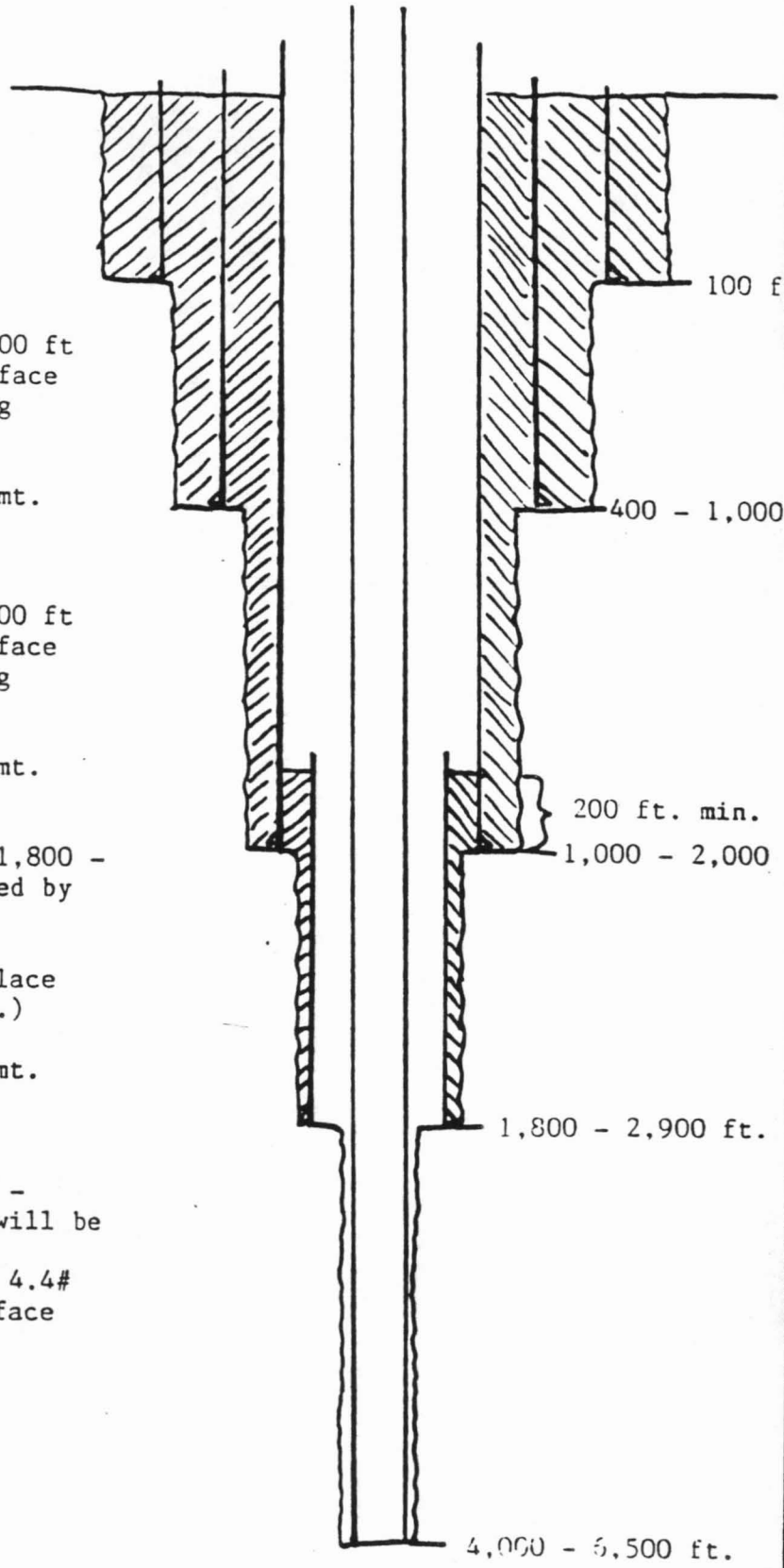

Wellhead equipment for 13.375 inch casing

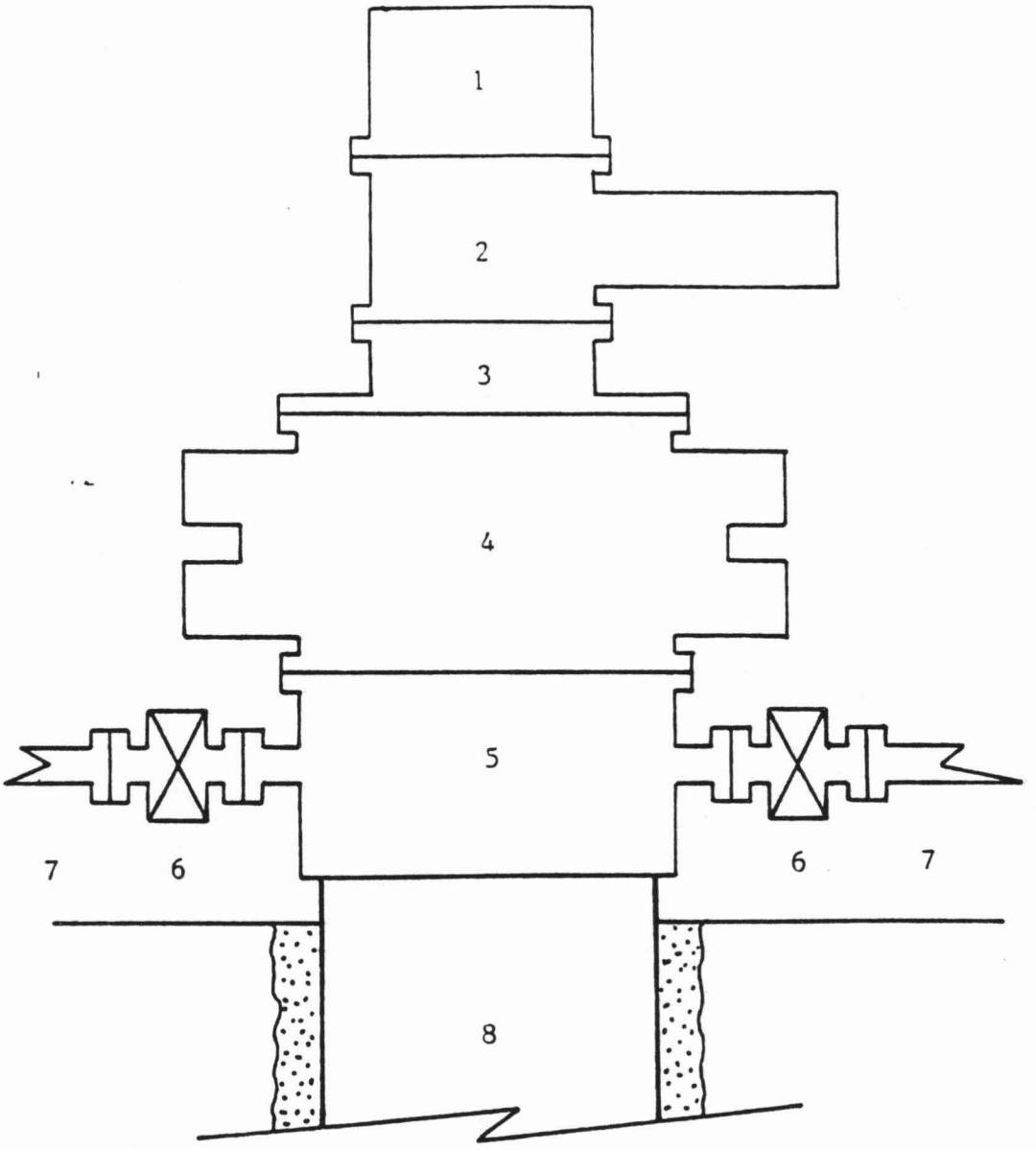

1. High speed rotating head
2. Picture nipple
3. Reducing spool
4. Hydraulic 3M double-gate 12 inch preventer
5. Series 900 wellhead flange
6. 3M 2 inch gate valves
7. 2 inch choke/kill lines
8. 13.375 inch, K55 casing

Figure 3

Wellhead equipment for 6.625 inch casing

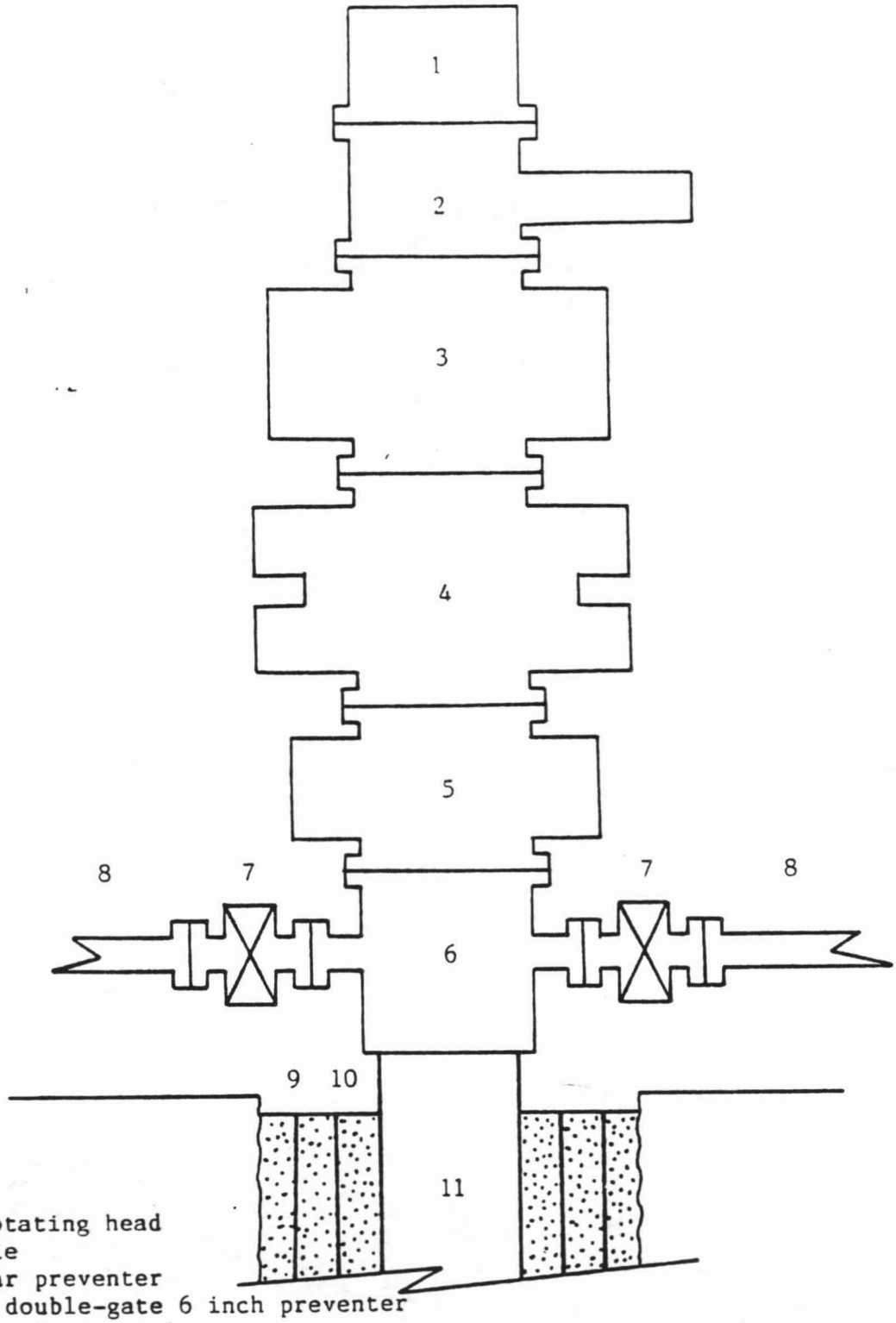

1. High speed rotating head
2. Picture nipple
3. 6 inch annular preventer
4. Hydraulic 3M double-gate 6 inch preventer
5. 6 inch 3,000 psi gate valve
6. Series 900 6.625 inch wellhead w/ 2 inch flanged outlets
7. 3M 2 inch gate valves
8. 2 inch choke/kill lines
9. 13.375 inch K-55 casing
10. 9.625 inch K-55 casing
11. 6.625 inch L-80 casing

Figure 4

Completion wellhead

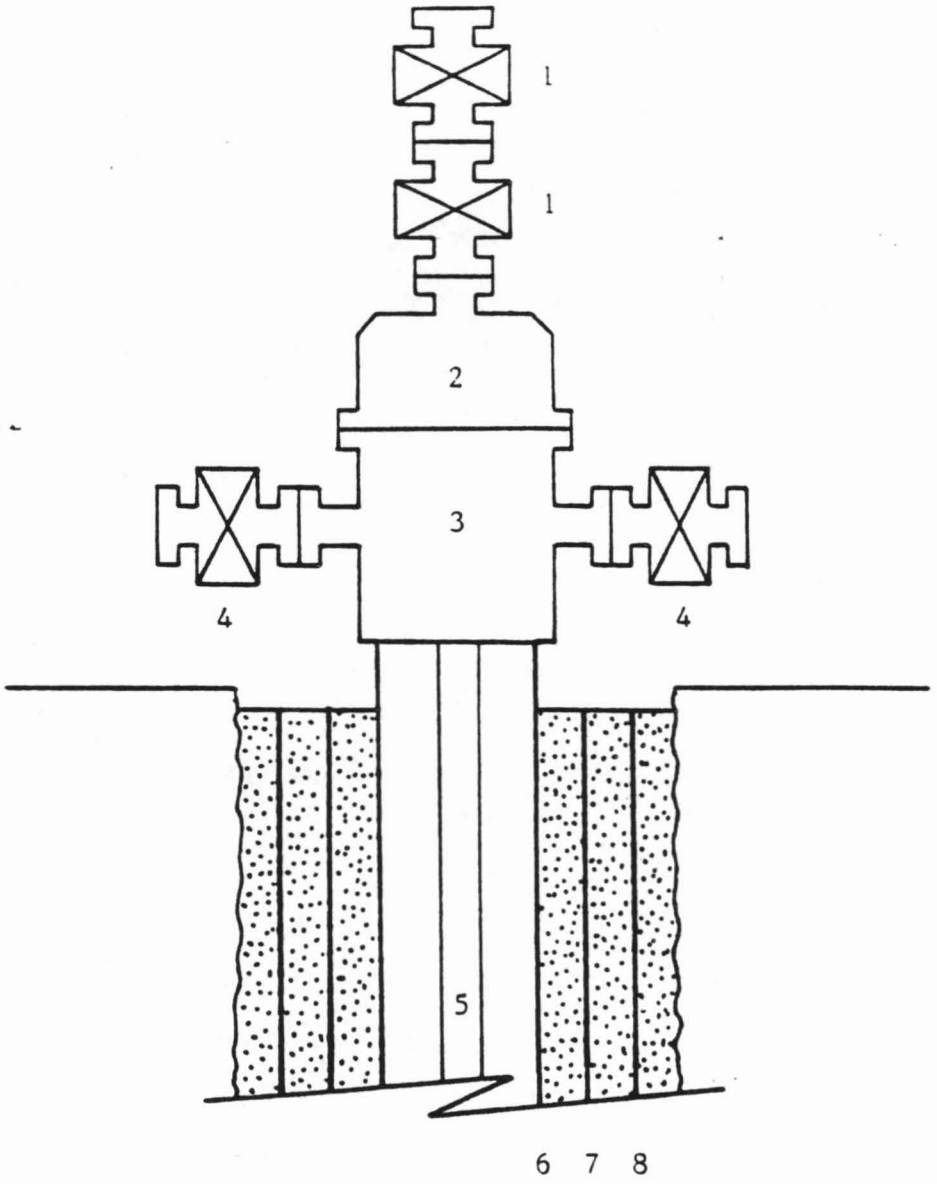

1. 3M 3 inch gate valves
2. Series 900 tubing head
3. Series 900 6.625 inch wellhead w/ 2 inch flanged outlets
4. 3M 2 inch gate valves
5. 2.75 inch completion tubing
6. 6.625 inch L-80 casing
7. 9.625 inch K-55 casing
8. 13.375 inch K-55 casing

WAIKAHEKA

HILEA

SEC. 1

HAWAIIAN SEC. 2

PLAT 29 PLAT 30 PLAT 49 PLAT 48

State of Hawaii

PUNA FOREST RESERVE

8870.273 Ac.

State of Hawaii
(Dept. of Land & Natural Resources
Natural Area Reserve Commission)
Exec. Order 3108
"WAO KELE O PUNA NATURAL
AREA RESERVE"

KAALAU SECTION 11

PLAT 01

15843.891 Ac.

MAKUU

POPOKI

HALONA

PLAT 03 SECTION 5

KAOHE HOMESTEADS PLAT 01

SEC 2, PLAT 03

State Hawaii
1.00 Ac

KAMAILI HOMESTEADS

3 01

SECTION PLAT

PLAT 08

PLAT 03

ADVANCE SURVEY
SUBJECT TO FIELD SURVEY

THIRD DIVISION		
ZONE	SEC.	PLAT
1	2	10

CONTAINING PARCELS

SCALE: 1 in. = 2000 ft.

3 153

PUNA FOREST RESERVE, PUNA, HAWAII

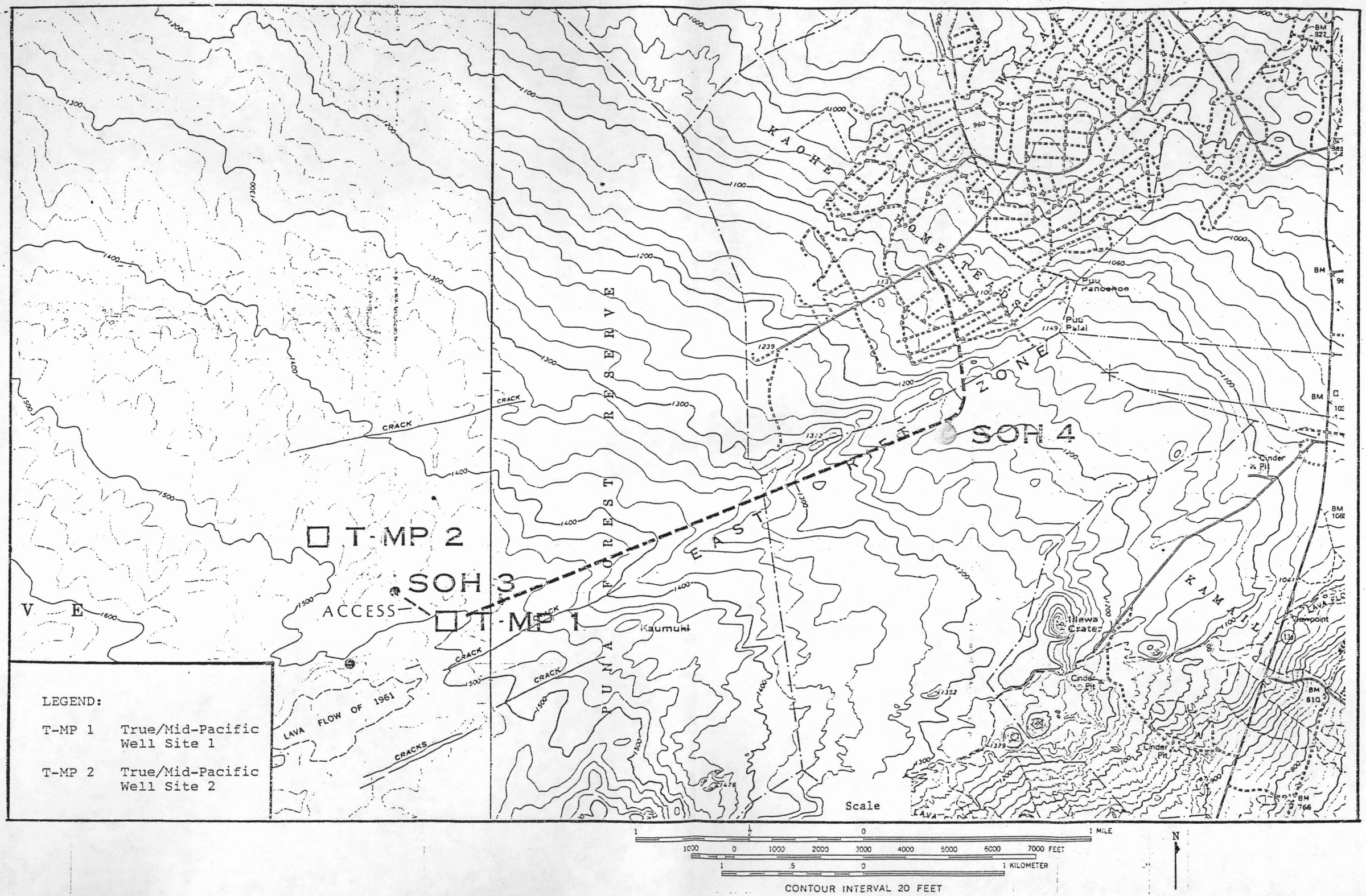

LEGEND:

T-MP 1 True/Mid-Pacific Well Site 1

T-MP 2 True/Mid-Pacific Well Site 2

424

WC

University of Hawaii at Manoa

Hawaii Natural Energy Institute
Holmes Hall 246 • 2540 Dole Street • Honolulu, Hawaii 96822

RECEIVED
89 NOV 8 A8:47
DEPT. OF LAND & NATURAL RESOURCES
STATE OF HAWAII

November 6, 1989

Mr. William W. Paty, Director
State of Hawaii
Department of Land and Natural Resources
P.O. Box 621
Honolulu, HI 96809

Re: Requested Change in Drilling Plan
for SOH-4 Scientific Observation Hole Program

Dear Mr. Paty:

Due to complications in obtaining right of entry and regulatory delays with the County of Hawaii Planning Department, time is insufficient now to drill SOH-4 as originally planned and permitted. Therefore, I request that the drilling plan for SOH-4 be modified so that the upper 100 feet of the SOH be drilled and cased utilizing the Universal 5000 core rig instead of a cable drill rig as originally permitted. Drilling will be conducted in compliance with conditions set forth in the Hawaii County Geothermal Resource Permit for Tonto core drilling operations.

The Universal 5000 core rig is capable of drilling a 17-1/2 inch hole and cementing 13-3/8 inch casing to a depth of approximately 100 feet. Tonto Drilling Services originally bid to perform this work, and will be able to complete the task at a cost that is essentially equal to or slightly lower than that bid by the cable tool operator.

The schedule for commencement of the SOH drilling is as follows:

1. All drilling equipment and supplies are currently on the barge or dock in Seattle and Long Beach. Sailing is now estimated to be November 7 from Seattle and November 8 from Long Beach.

2. Right of Entry and Permission to clear the SOH-4 site is expected by November 13.

3. Grubbing and grading of SOH-4 site is expected to be completed by November 18.

4. Estimated time of arrival in Hilo for the drilling supplies is now November 28.

5. Drilling is scheduled to commence on or about December 1, 1989.

6. Conductor pipe will be cemented in place on or about December 15.

7. The drilling crews will break for Christmas on or about December 16, and return to commence drilling on or about January 8, 1990.

I would be pleased to discuss any question you or your staff might have regarding details of the requested change in the drilling plan for SOH-4.

Sincerely,

Harry J. Olson
Principal Investigator
Hawaii Natural Energy Institute
University of Hawaii at Manoa

cc: A. Seki, HNEI

MEMORANDUM

FROM: Dean Nakano

SUBJECT: Field Inspection of True/Mid-Pacific's Grading Operations and the HELCO Repair Work a the HGP-A Facility

On Wednesday, September 20, 1989, I traveled to Hilo, Hawaii, to inspect the start of grading operations by True/Mid-Pacific Geothermal Venture in the Conservation area permitted for geothermal development activities by CDUA HA 12/20/85-1830.

I was met at the site by Messrs. Allan Kawada and Jim Taylor of True Geothermal Energy Company. Mr. Kawada provided a copy of the County Grading Permit which was issued by the Department of Public Works on Tuesday, September 19, 1989.

During the inspection, the following conditions were noted:

1. No further grubbing or grading work had been conducted in the Conservation area since the issuance of the Department's Cease and Desist Order on July 11, 1989;

2. The centerline of the access road and the permitted 45-foot road width boundaries were properly flagged and identified;

3. The boundary between the Agriculture and Conservation lands was also clearly marked and identified by road station marker number 69+50;

4. Some fallen trees (from the Agriculture portion) were cut into small sections and were being removed from the site. Mr. Kawada stated that full scale removal of the fallen trees would begin upon the completion of the grading of the drill site;

5. A total of (4) dozers (2 D-9's, 1 D-8, and 1 D-7), a grader, a drum roller/compactor, and 2 service trucks were at the site;

Later in the day, Art Seki from HNEI, and John Deymonaz, a drilling consultant for the SOH project, arrived at the True/Mid-Pacific site to inspect the location of SOH-4. The proposed site of SOH-4 is approximately 200 feet in from the security gate located at the start of the Campbell Estate (Agriculture portion) property.

The SOH-4 drill site will be adjacent to the True/Mid-Pacific access road and will be situated just outside of the 60 foot (width) boundary of the road. The proposed drill pad will be approximately 10,000 square feet in size and will be require additional grubbing and grading of the area.

Mr. Seki indicated that he would be submitting to the County of Hawaii for review and approval, an archaeological and biological survey recently completed by their consultants. Mr. Seki also stated that he would be coordinating directly with Ross Cordy of the Division of State Parks and Historic Sites in fulfillment of the Historic Preservation Review requirements for the SOH project.

Prior to returning to the airport, I drove to the HGP-A facility to monitor the ongoing repairs at the power plant. At the facility, I met with Frank Hicks, consultant for NELH, who identified the following repairs taking place at HGP-A:

1. The steam/brine separator (on loan from PGV) had been installed and was being adjusted for maximum performance. The second separator will serve as a back-up to the primary separator when it is not in service;

2. The turbine was not in operation, and the steam/brine from the well was being routed through the primary separator. The steam exiting the separator was going to the rock muffler and was being treated with caustic soda for abatement of H2S. The brine portion was being routed to the temporary sparger unit and percolation ponds;

3. The permanent sparger unit was being repaired due to some plugging of the flow of the brine from the separator;

4. Per Mr. Hicks, the rock muffler was also partially plugged and would be repaired sometime next week;

5. The cooling water supply lines were being replaced and many valves for the primary separator and other fixtures were under repair or being replaced;

6. Mr. Hicks estimated that all repairs to the HGP-A facility would be finished by the end of September or early October.

After completing my inspection of the HGP-A power plant facility, I returned to Honolulu at 6:00 pm as scheduled.

Dean Nakano

JOHN WAIHEE
GOVERNOR OF HAWAII

WILLIAM W. PATY, CHAIRPERSON
BOARD OF LAND AND NATURAL RESOURCES

DEPUTIES

LIBERT K. LANDGRAF
MANABU TAGOMORI
RUSSELL N. FUKUMOTO

AQUACULTURE DEVELOPMENT PROGRAM
AQUATIC RESOURCES
CONSERVATION AND ENVIRONMENTAL AFFAIRS
CONSERVATION AND RESOURCES ENFORCEMENT
CONVEYANCES
FORESTRY AND WILDLIFE
LAND MANAGEMENT
STATE PARKS
WATER AND LAND DEVELOPMENT

STATE OF HAWAII
DEPARTMENT OF LAND AND NATURAL RESOURCES
P. O. BOX 621
HONOLULU, HAWAII 96809

REF:WL-BM

NOV 2 7 1989

Dr. Harry J. Olson
Hawaii Natural Energy Institute
University of Hawaii at Manoa
Holmes Hall 246
2540 Dole Street
Honolulu, Hawaii 96822

Dear Dr. Olson:

This is to acknowledge your request for approval for modification to the drilling plan for Scientific Observation Hole SOH-4. It is our understanding that the requested change concerns the utilization of the Tonto Universal 5000 core rig to drill and set the shallow (0'-100') conductor casing, instead of a cable tool drill rig as originally permitted.

The Department has no objections to the proposed change in drilling plan, and as such, hereby approves the requested modification.

We thank you for providing us with a tentative schedule for commencement of the SOH operations, and request that you continue to keep the Division of Water and Land Development informed of your progress. Should you have any questions, please contact Manabu Tagomori, Deputy Director, at 548-7533.

Very truly yours,

WILLIAM W. PATY

University of Hawaii at Manoa

Hawaii Natural Energy Institute
Holmes Hall 246 • 2540 Dole Street • Honolulu, Hawaii 96822

December 14, 1989

Mr. Manabu Tagomori, Deputy
Division of Water and Land Development
Department of Land and Natural Resources
1151 Punchbowl Street
Honolulu, Hawaii 96813

Subject: Scientific Observation Hole (SOH) Program
University of Hawaii

Dear Manabu:

This is to inform you that Tonto Drilling Services has commenced drilling on SOH 4 as of 5 pm, December 13, 1989. The drilling plan calls for the conductor casing to be set and cemented by mid-December. After a two to three week Christmas break, coring will resume in early January 1990.

As requested, we have enclosed copies of the liability insurance and performance/payment bond secured by Tonto Drilling Services. Please call me at 522-5611, or Art Seki at 948-8788, if you have any questions. We are grateful for your assistance and corporation in the SOH program.

Sincerely yours,

Arthur Seki

for Harry J. Olson
Hawaiian Electric Industries/
Spark Matsunaga Fellow in
Geothermal Energy Research

Enclosures

cc: B. Anderson
W. Bonnet
R. Horii
D. Kanuha
M. Kaya
H. Kim
S. Ono