CONTENTS.

Sugar Plantations, Cane Growers and Sugar Mills.

ISLAND AND NAME.		MANAGER.	POSTOFFICE.
OAHU.			
Apokaa Sugar Co	*	G. F. Renton	Ewa
Ewa Plantation Co	*	G. F. Renton	Ewa
Waianae Co	***	Fred Meyer	Waianae
Waialua Agricultural Co	*	W. W. Goodale	Waialua
Kahuku Plantation Co	x*	Andrew Adams	Kahuku
Waimanalo Sugar Co	**	G. Chalmers	Waimanalo
Oahu Sugar Co	x	E. K. Bull	Waipahu
Honolulu Plantation Co	**	Geo. Ross	Aiea
Laie Plantation	x*	S. E. Wooley	Laie
MAUI.			
Olowalu Co	**	Geo. Gibb	Lahaina
Pioneer Mill Co	x	L. Barkhausen	Lahaina
Wailuku Sugar Co	**x	C. B. Wells	Wailuku
Hawaiian Commercial & Sugar Co	x*	F. F. Baldwin	Puunene
Maui Agricultural Co	...	H. A. Baldwin	Paia
Kipahulu Sugar Co	x	A. Gross	Kipahulu
Kihei Plantation Co	x*	A. J. McLeod	Kihei
HAWAII.			
Paauhau Sugar Plantation Co	**	James Gibb	Hamakua
Hamakua Mill Co	*x	A. Lidgate	Paauilo
Kukaiau Plantation	x	A. Horner	Kukaiau
Kukaiau Mill Co	*x	E. Madden	Paauilo
Ookala Sugar Co	**x	W. G. Walker	Ookala
Laupahoehoe Sugar Co	*x	C. McLennan	Papaaloa
Hakalau Plantation	**	J. M. Ross	Hakalau
Honomu Sugar Co	**x	Wm. Pullar	Honomu
Pepeekeo Sugar Co	**x	Jas. Webster	Pepeekeo
Onomea Sugar Co	**x	J. T. Moir	Hilo
Hilo Sugar Co	**	J. A. Scott	Hilo
Hawaii Mill Co	x	W. H. Campbell	Hilo
Waiakea Mill Co	*x	C. C. Kennedy	Hilo
Hawaiian Agricultural Co	**x	Wm. G. Ogg	Pahala
Hutchinson Sugar Plantation Co	**	Carl Wolters	Naalehu
Union Mill Co	*x	H. H. Renton	Kohala
Kohala Sugar Co	*	Geo. C. Watt	Kohala
Pacific Sugar Mill	x**	A. Ahrens	Kukuihaele
Honokaa Sugar Co	x**	K. S. Gjerdrum	Honokaa
Olaa Sugar Co	xx	J. Watt	Olaa
Puna Sugar Co	...		Kapoho
Halawa Plantation	x*x	R. H. Atkins	Kohala
Hawi Mill & Plantation	††	John Hind	Kohala
Puako Plantation	††	Jno. C. Searle	S. Kohala
Niuli Sugar Mill and Plantation	*x	Robt. Hall	Kohala
Puakea Plantation	*x	H. R. Bryant	Kohala
KAUAI.			
Kilauea Sugar Plantation Co	**	F. Scott	Kilauea
Gay & Robinson	x*x	Gay & Robinson	Makaweli
Makee Sugar Co	...	G. H. Fairchild	Kealia
Grove Farm Plantation	x	Ed. Broadbent	Lihue
Lihue Plantation Co	x	F. Weber	Lihue
Koloa Sugar Co	x	L. Weinzheimer	Koloa
McBryde Sugar Co	*x	W. Stodart	Eleele
Hawaiian Sugar Co	x*	B. D. Baldwin	Makaweli
Waimea Sugar Mill Co	*	J. Fassoth	Waimea
Kekaha Sugar Co	x	H. P. Faye	Kekaha

KEY.

	HONOLULU AGENTS.	
*	Castle & Cooke	( )
**	W. G. Irwin & Co	(8)
***	J. M. Dowsett	(1)
x	H. Hackfeld & Co	(9)
*x	T. H. Davies & Co	(8)
**x	C. Brewer & Co	(6)
x*	Alexander & Baldwin	(6)
x**	F. A. Schaefer & Co	(2)
x*x	H. Waterhouse Trust Co	(2)
††	Hind, Rolph & Co	(2)
xx	Bishop & Co	(1)

THE HAWAIIAN PLANTERS' MONTHLY

PUBLISHED FOR THE

HAWAIIAN SUGAR PLANTERS' ASSOCIATION

[Entered at the Post Office at Honolulu, T. H., as Second-class matter.]

VOL. XXVI.] HONOLULU, NOVEMBER 15, 1907. No. 11.

SUGAR PRICES FOR MONTH ENDING NOVEMBER 15, 1907.

			Centrifugals.	Beets.
Oct.	11,	1907	3.94¢	9s 7½d
"	18,	"	3.895¢	9s 4½d
"	25,	"	3.90¢	9s 3d
Nov.	1,	"	3.90¢	9s 3¾d
"	8,	"	3.80¢	9s 3¾d
"	15,	"	3.80¢	9s 5¼d

Messrs. Czarnikow, Macdougall & Co., under date of November 1, report as follows:

All things considered, it is not surprising that the market for raw sugars is dull and lifeless. The marketing of the western beet crop now in full operation, and of the southern cane crop just begun, is supplying large sections of the country that at other times are dependent upon refineries at the Atlantic ports, but besides the normal and looked-for shrinkage in the demand for the product of our refiners, there is an extra and unlooked-for shrinkage, owing to the scarcity of money that has arisen from the financial crisis now happily on the wane. A diminished movement of refined always causes a diminished demand for raws, and refiners are not anticipating their wants beyond a month ahead, and in some cases hardly to that extent.

Even were they desirous of doing so, they would find difficulty in making large purchases of foreign cane sugar, so small are the supplies coming upon the market, but European beets could be drawn upon, and it is this fact and the uncertain course of that market that has doubtless impelled owners of Javas afloat to part with them at prices which they would not otherwise have listened to.

European beet markets were dull and easier during the greater part of the week, but are firmer at the close. Today's f. o. b. quotations are: November, 9s 3¾d; December, 9s 3¾d; January-March, 9s 6d; May, 9s 8d.

The factory estimates for the beet crop for 1907-08 in Convention countries are 4,500,000 tons. The several estimates for Convention countries now stand as follows, and, for purposes of comparison, we give last season's preliminary estimates along with the figures of final outturn:

ESTIMATES FOR CONVENTION COUNTRIES.

	F. O. Licht.	Otto Licht.	Gieseker.	Factories.	Actual Crop.	
October 1907....	4,850,000	4,635,000	4,510,000	4,500,000		
" 1906....	4,840,000	4,710,000	4,650,000	4,448,440		4,802,000 tons

It will be noticed that Mr. F. O. Licht's estimate of the 1906-07 crop in Convention countries came within 40,000 tons of the actual results.

Messrs. Willett & Gray in their "Weekly Statistical" of October 31, state:

Raws.—Other matters have taken the place of interest in the sugar market during the week under review, and the only reported business is a lot of Centrifugals from store at the current quotation of 3.90¢ per lb. for 96° test basis, showing no change in quotations for the week. European markets have been equally dull and comparatively steady between small fluctuations from 9s 4½d to 9s 3d for beet sugar, closing at 9s 3d for prompt delivery, with futures at 9s 5½d for January-March and 9s 7¾d for May.

The European beet crop has been further helped by continued favorable weather.

The Cuba crop also has been benefited by rains where wanted.

Small remaining stocks available from last crops of cane sugars steady the market, and avoid declines which might naturally result from the panic extending from Wall Street over the entire country, a panic, which, in our opinion, is unwarranted by the material conditions of the country and will soon be over, although its disastrous results may be felt for a long time.

Receipts for the week 34,586 tons meltings, meltings 41,000 tons, stocks in United States and Cuba together 250,783 tons.

Louisiana crop harvesting is now in full swing, but there is not sufficient grinding as yet to warrant change of estimates.

At the close it is generally believed that a Java cargo, due end November, has been sold at 10s c. i. f., equal to 3.87c duty paid.

ANNUAL MEETING OF HAWAIIAN SUGAR PLANTERS' ASSOCIATION.

The twenty-seventh annual meeting of the Hawaiian Sugar Planters' Association was held in Honolulu, November 11 to 14. The usual program of annual meetings, consisting of the reading of reports, discussions thereof, and lectures by members of the Experiment Station staff, was carried out.

One of the features of the meeting was an excursion of the members on the Oahu Railroad to the Ewa and Oahu Sugar Company plantations and to the pineapple district at Wahiawa.

The following is a list of the members of the Association who attended the meeting:

Andrew Adams, H. P. Baldwin, E. F. Bishop, E. K. Bull, E. H. Broadbent, A. W. T. Bottomley, George Chalmers, C. M. Cooke, G. F. Davies, T. C. Davies, C. F. Eckart, J. Fassoth, D. Forbes, H. P. Faye, Geo. Gibb, Jas. Gibb, W. M. Giffard, K. S. Gjerdrum, W. W. Goodale, A. Garvie, J. F. C. Hagens, A. Horner, R. Ivers, P. C. Jones, C. C. Kennedy, C. McLennan, R. D. Mead, A. Mason, W. G. Ogg, E. E. Paxton, W. Pfotenhauer, T. H. Petrie, G. F. Renton, H. H. Renton, J. M. Ross, Geo. Ross, F. A. Schaefer, J. A. Scott, W. O. Smith, F. Scott, E. D. Tenney, L. A, Thurston, John Watt, W. G. Walker, F. Weber, Jas. Webster, C. Wolters, E. H. Wodehouse, Geo. Watt, L. Weinzheimer.

On Monday, November 11, the meeting was called to order by Mr. E. F. Bishop, the President of the Association, who, in opening the proceedings, said:

PRESIDENT'S ADDRESS.

"On behalf of the trustees, I extend a cordial welcome to the "members of the Association assembled here today for the an-"nual meeting. It has been customary for a good number of "years past that we get together once a year to interchange ideas, "listen to reports and discuss questions of general interest to "that portion of our community identified with the sugar industry.

"The Planters' Labor & Supply Co., the parent organization of "the H. S. P. A., was organized in March, 1882; thus this year "the organization has been in existence for a quarter of a century "It may not be amiss to here mention those who were identified "with the first organization. The officers elected in March, 1882, "were as follows:

"S. N. Castle ..... President
"E. P. Adams.....
"S. L. Austin.....
"S. T. Alexander...
"G. N. Wilcox.....
..... Vice-Presidents
"P. C. Jones ..... Corresponding Secretary
"F. A. Schaefer ..... Recording Secretary
"J. H. Paty ..... Treasurer

"Three of the above-mentioned are still alive and are with us "today at this meeting.

"The crop of the year 1882, from the best information avail-"able, was 57,000, and the possible output of the Islands was esti-"mated at 84,000 tons. This year of 1907 the total crop is 440,-

"017 tons. The growth of the industry is evident without any "further remarks or comparison, and I think it may be safely "said that the importance of this Association, the scope of its "work and the necessity of its continuance can be regarded in "the same ratio. So much by way of retrospection.

"The work of the year just closed is worthy of special mention "in many respects, and this will be largely covered in the reports "which will be read to you in the course of the meeting. My "reference to the several items is only cursory. In many re-"spects, the work of the year has been one of observation—watch-"ing the progress or results from work and experiments estab-"lished in former years. The reports to be submitted will not "cover as many subjects as is customary, for the reason that many "of them have been pretty thoroughly exploited in former years, "leaving those who are asked to write up fresh reports on these "old subjects in rather a bad way, and with threadbare topics to "deal with. The work of the Experiment Station, however, has "been full and interesting, and in my opinion it will give us "enough food for thought to carry us over the present annual "assembly. Its work, also, while interesting, has been as much "in the way of observation as in any other respect, the experi-"ments previously established having reached a point where they "are decidedly in evidence.

"Mr. Eckart's Hawaiian seedlings alone cover a great work, "and it puts him in a class to be envied by all who are identified "with scientific agriculture.

"The Entomological Division, while not resting on its oars "exactly, is certainly resting on laurels so well earned that the "work of the division adds to the fame of Koebele and Perkins "in a way that must be lasting in the annals of the past war-"fare in sugar cane. I make special mention of the fact that the "sugar industry in this Territory has now ceased to be anxious "over the leaf-hopper pest, yet how short is the time since it "seemed that the entire industry was threatened with disaster, "the scope of which was amply demonstrated by the complete "devastation of the crops of one plantation, while many were "seriously damaged.

"In a trip around the plantations made this past summer, I "was much pleased to note that full credit was accorded by the "managers generally to the Experiment Station staff for the ef-"fective work done, which is as it should be. Individual mem-"bers have from time to time depreciated the expense of mainten-"ance of the Station, but I regard its work today as of incal-"culable value compared with which the cost of maintenance is "as the annual bill of a family physician with a very healthy "family as a patient.

"The Pathological Division of the Experiment Station, organ-"ized under the able direction of Dr. Cobb, has done most effective "work during the past year, as must have been evident to you all

"from the bulletins that have been issued. The research made "in the matter of root and fungus diseases of cane and their treat-"ment are sufficiently early to enable us to take the necessary "steps to head off disaster from these causes. While many of "the suggestions made by the division involve considerable labor "and expense, I believe it will be found sound policy that the "recommendations made as to treatment of cane diseases be car-"ried out. Dr. Cobb has retired from the head of the division, "and is succeeded by Mr. Lewton-Brain, who was his able as-"sistant for some time prior to Dr. Cobb's retirement.

"While not purely matters of Association work, the questions "of labor and transportation have been much in the concerns of "the industry during the past year, and more sugar has been "stored and for longer periods than ever before. Early in the "year the labor supply began to be augmented by the arrival of "immigrants from Southern Europe direct, and three expeditions "of this character have come in during the year. After sifting, "these people have developed a desirable class, and it is to be "hoped that the immigration laws will be so amended at the com-"ing session of Congress, that the coming of this class of people "to Hawaii may be resumed, stopped as it has been because of a "possible irregularity in the methods foliowed by the Territorial "Board of Immigration having in charge this work.

"The outlook for future supplies of labor from the Orient is "not cheering because of the general trend of feeling in the "United States vs. Oriental immigration, growing, as it has, into "an issue that has forced official recognition. Hawaii's geo-"graphical location is such that any radical anti-Oriental policy "must seriously affect us, and I look to the future with some "considerable apprehension when viewing it from the standpoint "of the labor requirements of this Territory. Even though there "be legislation enabling the resumption of emigration from "Europe, it is my opinion that this source alone will not supply "our needs and that a part of our labor must continue to come "from the Orient. However, this may not needs be accepted as a "tenable or positive prediction. Ever since my early connection "with the sugar business, the industry has faced a cloudy horizon "from some cause or other, and it may be that it will be our "good fortune to come out from this apparent emergency in the "way of labor without having sustained any setback or injury "to the industry.

"The trustees have made an attempt during the past year to "get native labor from the Philippine Islands, but the attempt "has been all but a failure, less than one hundred people all told "having arrived here as a result of an expensive effort to estab-"lish a regular emigration from that place. Recently the trus-"tees have discontinued their efforts in this direction, the ob-"stacles and difficulties in the way seeming almost insurmount-"able.

"During the year, as you are all aware, we have been visited by "a party of Congressmen; also by Secretary Straus of President "Roosevelt's cabinet, and it seems as though a better understand-"ing of Hawaii's necessities should prevail with the powers that "be at Washington, and it is to be earnestly hoped that some "good will result.

"Since your last annual meeting 100,000 acres of sugar cane "have resolved themselves into 440,000 tons of sugar in Hawaii. "The work of the Association in connection with this tremendous "achievement will be given you in the reports to be submitted. "And it seems unnecessary for me to speak further on this point. "In retiring from the presidency of the organization, I wish to "offer my congratulations to planters generally upon the work of "this year of 1907, the banner year in the history of the sugar "industry of these Islands and I can wish nothing better than "that the years to come may be no less years of prosperity than "has been this year A. D. 1907."

Mr. W. O. Smith, the Secretary of the Association, thereupon read his report for the past year as follows:

SECRETARY'S REPORT.

The last annual meeting of the Association was held November 20, 21, 22 and 23, 1906, in the rooms of the Association in Honolulu.

At that meeting the following named Trustees were elected:

F. A. Schaefer, H. P. Baldwin, W. G. Irwin, S. M. Damon, F. M. Swanzy, E. D. Tenney, E. F. Bishop and W. O. Smith.

The Trustees organized and elected the following officers:

President, E. F. Bishop; vice-president, F. A. Schaefer; secretary and treasurer, W. O. Smith; auditor, G. H. Robertson.

COMMITTEES AND COMMITTEE REPORTS.

This year an attempt was made to appoint the usual committees, but with the exception of the Committees on Labor and Experiment Station, which are active throughout the year, a feeling developed among the managers which appeared to be largely supported, that as subjects, such as fertilizations, irrigation, cultivation, and more recently manufacture, are treated by the Experiment Station and bulletins thereon issued from time to time during the year, there remained very little for others to report upon at the annual meeting. Reports on those subjects are, for this reason, not available for this meeting other than as they may be touched upon in the report of the Experiment Station.

The matter of reports for annual meetings should receive

further consideration and full expressions of opinion obtained from the managers to assist the Trustees in arranging for reports for future meetings.

It would seem desirable that reports should be prepared from time to time by committees of managers giving the results of their practical experience, and suggesting lines of inquiry, but it may not be advisable to require reports every year upon one fixed list of topics.

It might be well that while the meeting is in progress thought be given to the subject and before the day of adjournment the special subjects for report at the next meeting be decided upon.

If through lack of attention and effort, reporting by committees of managers of plantations be abandoned and consideration and discussion be confined to the subjects presented by the report from the Experimet Station, one of the important objects of the annual meeting will fail.

During the year the Board of Trustees have held thirty-six meetings besides which a special meeting of the members of the Association was held for the purpose of amending the by-laws of the Association.

The report of the sugar crop for the several plantations herewith submitted shows a total of 440,017 short tons, as follows:

	Tons.
Island of Hawaii	143,891
Island of Oahu	119,273
Island of Maui	104,772
Island of Kauai	72,081
Total	440,017

The largest crop heretofore produced was in the year 1903 and amounted to 437,991 tons. The average crop for the last five years, including 1907, has been 420,180 tons.

Returns show a total of 99,716 acres of cane harvested during the year, yielding an average per acre of 8,826 pounds.

YIELD OF IRRIGATED PLANTATIONS

Acres	Tons of Sugar	Yield per Acre, Lbs.
50,623.63	291,728.2	11,525

YIELD OF UNIRRIGATED PLANTATIONS.

Acres	Tons of Sugar	Yield per Acre, Lbs.
49,292.37	149,205.96	6,054

YIELD BY ISLANDS.

Island.	Acres.	Tons of Sugar.	Yield per Acre, Lbs.
Oahu	18,994.64	119,272.46	12,559
Kauai	16,289.49	72,194.68	8,864
Maui	16,724.5	104,772.47	12,529
Hawaii	47,907.37	144,694.55	6,041

There is a slight difference in the total number of tons of sugar produced for the year reported to the Experiment Station and the amount as shown by the report herewith submitted. This may be accounted for by the fact that the plantations in reporting their tonnage to the Experiment Station report the total amount produced for the crop, while in reporting for the Secretary of the Association report the amount produced for the year ending September 30, 1907.

The labor committee will report the efforts to obtain laborers from the Azores and Madeira and from Spain. A total number of 2,430 Portuguese men, women and children arrived, and 2,246 Spaniards; besides these, 86 men, women and children came from the Philippines.

The introduction of European laborers has been interrupted as a result of certain provisions of the immigration laws which have been construed to prevent even a state or territorial government from assisting the immigration of such laborers, excepting with legislative appropriations.

The organization of the Sugar Planters' Association was made in March, 1882, under the name of the Planters' Labor and Supply Company, which name was later changed to the Hawaiian Sugar Planters' Association. The benefits which have resulted from co-operation and concerted effort are manifest to all.

A review of the work of the organization during the past twenty-five years would be of much interest, but it would exceed the limits of this report. The period has been one of great moment in the history of these Islands, and the industrial and financial development has been mainly the result of the progress made in the sugar industry.

It is to be hoped that, with the development of other agricultural industries and enterprises and the growth of commerce in this ocean, the next twenty-five years will show ever greater progress.

Recpectfully submitted,

W. O. SMITH,
Secretary.

Honolulu, Nov. 11, 1907.

STATEMENT OF HAWAIIAN SUGAR CROP, 1906-1907.

From October 1, 1906, to September 30, 1907.

Islands.	*Tons.*	*Total Tons.*
HAWAII.		
Hawaii Mill Co., Ltd	1,800	
Waiakea Mill Co	8,186	
Hilo Sugar Co	11,649	
Onomea Sugar Co	12,432	
Pepeekeo Sugar Co	6,677	
Honomu Sugar Co	5,502	
Hakalau Plantation Co	11,914	
Laupahoehoe Sugar Co	7,848	
Ookala Sugar Plantation Co	5,352	
Kukaiau Plantation Co	2,103	
Kukaiau Mill Co	1,402	
Hamakua Mill Co	6,835	
Paauhau Sugar Plantation Co	7,857	
Honokaa Sugar Co	6,898	
Pacific Sugar Mill	2,931	
Niulii Mill and Plantation	2,501	
Halawa Plantation	1,615	
Kohala Sugar Co	2,400	
Union Mill Co	2,828	
Hawi Mill and Plantation	5,296	
Hutchinson Sugar Plantation Co	7,063	
Hawaiian Agricultural Co	11,630	
Puakea Plantation	400	
Olaa Sugar Co., Ltd	9,431	
Puna Sugar Co., Ltd	1,172	
Puako Plantation	169	
		143,891
MAUI.		
Kipahulu Sugar Co	1,809	
Kaeleku Plantation Co., Ltd	2,702	
Maui Agricultural Co	20,220	
Hawaiian Commercial & Sugar Co	44,143	
Wailuku Sugar Co	7,425	
Olowalu Co	1,448	
Pioneer Mill Co., Ltd	23,099	
Kihei Plantation Co., Ltd	3,926	
		104,772
OAHU.		
Waimanalo Sugar Co	3,186	
Laie Plantation	873	
Kahuku Plantation Co	6,500	

Islands.	*Tons.*	*Total. Tons.*
Waialua Agricultural Co., Ltd	22,614	
Waianae Co	6,214	
Ewa Plantation Co	31,790	
Apokaa Sugar Co., Ltd	461	
Oahu Sugar Co	28,457	
Honolulu Plantation Co	19,178	
		119,273
KAUAI.		
Kilauea Sugar Plantation Co	3,844	
Makee Sugar Co	6,696	
Lihue Plantation Co	14,127	
Grove Farm Plantation	1,807	
Koloa Sugar Co	5,553	
McBryde Sugar Co., Ltd	7,890	
Hawaiian Sugar Co	20,140	
Gay & Robinson	2,590	
Waimea Sugar Mill Co	1,425	
Kekaha Sugar Co	7,329	
Estate V. Knudsen	680	
		72,081
Total		440,017

Agents.	*Tons.*	*Total Tons.*
ALEXANDER & BALDWIN, LTD.		
Hawaiian Sugar Co	20,140	
Maui Agricultural Co	20,220	
Hawaiian Commercial & Sugar Co	44,143	
Kihei Plantation Co., Ltd	3,926	
Kahuku Plantation Co	6,500	
Laie Plantation	873	
		95,802
H. HACKFELD & CO., LTD.		
Lihue Plantation Co	14,127	
Grove Farm Plantation	1,807	
Koloa Sugar Co	5,553	
Kekaha Sugar Co	7,329	
Pioneer Mill Co., Ltd	23,099	
Kipahulu Sugar Co	1,809	
Kukaiau Plantation Co	2,103	
Oahu Sugar Co	28,457	
Hawaii Mill Co., Ltd	1,800	
		86,084

Agents,	*Tons.*	*Total Tons.*
W. G. IRWIN & CO., LTD.		
Honolulu Plantation Co.	19,178	
Paauhau Sugar Plantation Co.	7,857	
Hutchinson Sugar Plantation Co.	7,063	
Hakalau Plantation Co.	11,914	
Hilo Sugar Co.	11,649	
Kilauea Sugar Plantation Co.	3,844	
Waimanalo Sugar Co.	3,186	
Olowalu Co.	1,448	
		66,139
CASTLE & COOKE, LTD.		
Waialua Agricultural Co., Ltd.	22,614	
Ewa Plantation Co.	31,790	
Apokaa Sugar Co., Ltd.	461	
Kohala Sugar Co.	2,400	
Waimea Sugar Mill Co.	1,425	
		58.690
C. BREWER & CO., LTD.		
Hawaii Agricultural Co.	11,630	
Wailuku Sugar Co.	7,425	
Honomu Sugar Co.	5,502	
Onomea Sugar Co.	12,432	
Ookala Sugar Plantation Co.	5,352	
Pepeekeo Sugar Co.	6,677	
		49,018
THEO. H. DAVIES & CO., LTD.		
Waiakea Mill Co.	8,186	
Laupahoehoe Sugar Co.	7,848	
Kukaiau Mill Co.	1,402	
Hamakua Mill Co.	6,835	
Niulii Mill and Plantation	2,501	
Union Mill Co.	2,828	
McBryde Sugar Co., Ltd.	7,890	
Puakea Plantation	400	
		37,890
BISHOP & CO.		
Olaa Sugar Co.	9,431	
Puna Sugar Co., Ltd.	1,172	
		10,603
F. A. SCHAEFER & CO.		
Honokaa Sugar Co.	6,898	
Pacific Sugar Mill	2,931	
		9,829

Agents.	*Tons.*	*Tolal Tons.*
MAKEE SUGAR CO.		
Makee Sugar Co		6,696
J. M. DOWSETT.		
Waianae Co		6,214
HIND, ROLPH & CO.		
Hawi Mill and Plantation	5,296	
Puako Plantation	169	
		5,465
HENRY WATERHOUSE TRUST CO., LTD.		
Gay & Robinson	2,590	
Halawa Plantation	1,615	
		4,205
M. S. GRINBAUM & CO., LTD.		
Kaeleku Plantation Co., Ltd		2,702
H. M. VON HOLT.		
Estate V. Knudsen		680
Total		440,017

* 2,000 pounds to the ton.

HAWAIAN SUGAR PLANTERS' ASSOCIATION,

By its Secretary,
W. O. SMITH.

After the reading of the Secretary's report the meeting proceeded to the election of officers with the following result:

Trustees of the Association, F. A. Schaefer, S. M. Damon, W Pfotenhauer, E. D. Tenney, F. M. Swanzy, H. P. Baldwin, W. O. Smith, W. G. Irwin, E. F. Bishop.

At the noon recess the Trustees named organized and elected as their officers: F. A. Schaefer, President; S. M. Damon, Vice-President; W. O. Smith, Secretary and Treasurer; Geo. H. Robertson, Auditor, and R. D. Mead, Assistant Secretary.

Upon convening after the noon recess a committee of the Trustees offered a recommendation, which was adopted, having for its object a reorganization and general shaking up of the standing committees of the Association. Some subjects for committee report were abandoned and others were added, with the result that committees on the following subjects are to be appointed: Experiment Station, Labor, Cultivation, Fertilization

and Irrigation on Irrigated Plantations; Cultivation and Fertilization on Unirrigated Plantations; Cutting, Loading and General Plantation Transportation; Manufacture of Sugar and Utilization of By-products; Machinery (a) Manufacture and (b) Agriculture; Forestry; Warehouse for, and Storage of Raw Sugars.

Mr. Noel Deerr, Assistant Director of the Division of Agriculture and Chemistry, thereupon delivered an address on manufacture, which was preliminary to a more exhaustive report on this subject to be later issued as a Bulletin of the Experiment Station.

Mr. Eckart called attention to a drop in the richness of the mill juice during the season of 1907, stating that while many had attributed this to fungus diseases and insect pests, and others to climatic conditions, he had prepared data which seemed to show conclusively that it was due to the difference in rainfall for the two seasons. Mr. Eckart stated that there is little doubt but that the amount of rain which fell during 1907 in excess of that which fell in 1906, taking into consideration the fact that the rain was distributed over a greater number of days, caused the drop in sucrose; that the fact that the average purity has not fallen should cause no alarm so far as insect pests and fungus diseases are concerned.

It is now proposed to publish the principal papers, reports and lectures in the order in which they were submitted and delivered, with such notes of discussion as may be of interest.

REPORT ON MACHINERY.

To the Hawaiian Sugar Planters' Association.

Gentlemen: At the urgent request of Mr. Bishop, president of your Association, I consented to be appointed a committee of one to make a report on machinery for the next annual meeting. Mr. Bishop stating that it was difficult to get a committee from the different islands to act together, and further by reason of the writer visiting the mills on the various plantations from time to time, a resume showing the development in this important department of the Hawaiian sugar industry would be of interest.

Prior to 1895 the machinery and process of manufacture in our cane factories was equal to that of any cane sugar country in the world and the equipment in most cases being superior, as for example the output of sugar in the Hawaiian Islands about this time was practically the same as in Louisiana, where there were approximately 500 mills in comparison with 50 in Hawaii, handling the same amount of product. At the same time Hawaii could boast of, perhaps, the largest cane sugar factory in the world, having a capacity of 100 tons of

raw sugar in a ten-hour day; there were, however, individual factories in Louisiana which, to say the least, were the equal of ours, but in comparison with the beet sugar industry we were far behind in efficiency both of extraction and manufacture and it was not until 1898 with the establishment of the Oahu Sugar Co.'s plant that we could justly claim to be anywhere near an equal footing with the beet sugar countries. The above mentioned mill was fitted with all modern appliances which had proven successful in the leading beet sugar factories in Europe. From that time, which was during the period of annexation of these Islands to the United States of America, mill construction and improvements proceeded with leaps and bounds until at the present day we can justly claim and are acknowledged by the cane sugar world to be the leaders not alone in the cultivation of cane but in the manufacture of sugar from same.

MILLING MACHINERY.

With the introduction of the nine-roller milling plant at Ewa and later of the twelve-roller installation at Oahu Plantation, the milling of cane has changed its aspect entirely and in place of tearing machinery to pieces in an ineffectual attempt to squeeze the sucrose contents from the cane, the more rational method of maceration has been universally adopted and has now almost reached the extent of a diffusion, in fact many of our mills apply the maceration in front of the first mill so as to fully obtain the benefit of this system of extraction, as it is well known that no amount of pressure on the rolls can make up in extraction for lack of a proper and adequate maceration.

CLARIFICATION.

In reference to the system of machinery used in the clarification process, we are practically in the same position that we were twenty years ago, in that the intermittent settling system appears to give the best results.

For a brief period the Deming continuous process had a trial, this process in fact being a repetition of the continuous settling plan as installed at the Spreckelsville Mills in 1880, the results as obtained with the Deming being practically the same. It is recently claimed, however, that the Deming system has been greatly improved on, by the installation of Closed Settling tanks which also work on the continuous principle, the advantage of the closed tanks being that the high temperature obtained in the heaters can be continued in the settlers and the heat not reduced until its delivery from the absorber when it is ready for evaporation.

In the cut herewith "AA" represents the ordinary double heater as in use in most of our factories; "B" represents the closed continuous settlers which are constructed for a pressure of from 10 to 20 degrees so as to make it possible to carry a temperature through the closed settlers of from 212 to 260 degrees, the liquor then passing on to the Absorber where the heat is reduced below the boiling point for delivery to the evaporator.

The mud precipitate at the bottom being delivered continuously to the filter press either through a pump or direct without exposure to the atmosphere.

From recent reports received from Porto Rico this system of clarification has been most successful, the liquor being passed through the closed settlers at a temperature of 235 degrees and delivered into the evaporator supply tank at 180 degrees.

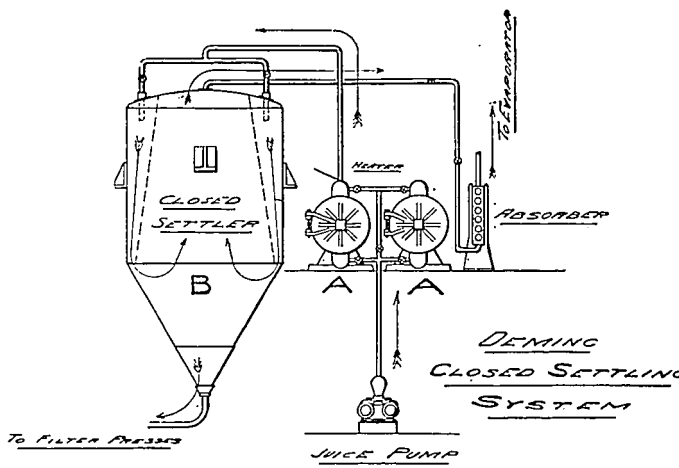

JUICE WEIGHING VS. MEASURING.

The question of a suitable apparatus for weighing or measuring juice is still an unsettled one; further as to whether the juice should be weighed or measured is still another question, in either case the amount of sucrose in the "weighed" or "measured" juice is a matter of calculation depending on the sucrose contents of the liquor.

In several of our mills weighing scales have been installed which require the continuous attention of an attendant and a suitable automatic register for checking the number of tanks weighed. The weight is stamped on a card by the machine with the assistance of the attendant in which the total weight

of the tank and juice is indicated, and later the tare is taken and stamped on the same card; therefore, the only source of error possible in this case, assuming that the attendant is not remiss in his duty, is that of missing a whole tank, the register showing the number of tanks filled and of course a similar number of weight cards must be produced to correspond with same. In order to correct the possibility of error in this independent weighing and further to dispense with the expense of an attendant, several automatic weighing and measuring machines have been placed on the market, a number of which have been tested in our factories. It cannot be said that any of these have proven entirely successful for the special reason that in all cases where automatic weighing machines are used one of the principal requirements for reasonably accurate work is a continuous supply of material or liquor to the weighing apparatus, as any change in the rate of weighing calls for a corresponding adjustment of the weighing machine to this condition, when the supply is varying.

At the Salinas Beet Sugar Factory, for example, where granulated sugar only is made which goes into direct consumption, the bagged sugar is mechanically weighed, as well as the sewing of the bags. The condition required in their case is that a bag of sugar must be full 100 pounds in weight and no package less than weight; it then becomes a question of getting the desired results with the least expense in labor and the smallest loss in excess weight.

In fact the above applies to all commercial conditions in so far as mechanical operation is concerned, so that the question as to whether these machines which deliver a 100 pound package of sugar when operating continuously will deliver, say 102 or 105 pounds when tested separately never becomes an issue, the only question being to reduce the excess to a minimum and under no circumstance to be "under weight."

FILTER PRESSES.

The Filter Press question is always in order, and the question of Filter Press construction which will give the best results leaving the least amount of loss in the mud casks is one that has had a considerable amount of attention. There are, perhaps, twenty different types of filter presses in our mills in all of which different results are obtained. It is quite generally conceded at this time that the maceration question comes to the front in this case as in the case of the mill extraction and that the factories that use the largest amount of water for the purpose of lixiviation in the presses shows the lowest amount of sucrose loss; however, it is quite possible to carry this to an extreme, in which case the additional cost of the evaporation of the water may be greater than the sugar recovery.

In many of our mills which have no available fuel other than the bagasse it is quite possible that this water can be used to better advantage on the mills for macerations, than in the mud presses; however, this is a question that concerns the department under the heading of Manufacture.

CRYSTALLIZERS.

Many of our plantations are giving the question of crystallizers quite earnest attention. This applies particularly to the older factories in which the process of manufacturing the low grades of sugar is still carried on with cooler cars and the last grade delivered into a cistern or series of tanks where it is stored until the end of the season, after which it is pumped or otherwise delivered into the mixer and dried. This process while it might have been suitable with the small output of many of our factories, with cheap labor fifteen or twenty years ago, and abundance of fuel in the shape of wood, etc., and the high sugar prices which prevailed, however, is not applicable at the present time, so that many of our older mills, such as at Onomea, Pepeekeo, Hakalau, etc., are adopting the more rational method of crystallizers or perhaps "Crystallization in Motion Tanks" for the handling of their low grade products.

The cut herewith illustrates the system of crystallizers as now being installed by the Pacific Sugar Mill Co. There will be ten of these crystallizers of a size to suit their molasses pan, this pan having been enlarged to suit the purpose. "AAA" represents the end and side elevations of these crystallizers each being fitted with a worm driving gear and pulleys for the operation of the stirrer in same. The product from the pan is delivered into the crystallizers by means of an open trough "B" and the delivery from the crystallizers being by means of gates "C" into a cement lined trough to the Magma Pump "D," this Magma Pump delivering it to the centrifugals. The low grades in this factory have been handled with the cooler cars and open cistern method, and was entirely inadequate for the present capacity of the factory. The type of crystallizers as shown is similar to an installation at the new Paia Mill. These are in every respect similar to the German make of crystallizers as furnished the Oahu Sugar Co., with the exception that they are the open type and not jacketed.

As a further explanation of the departure in this construction from the standard crystallizers as used in the beet sugar countries it must be understood that beets are a product of the temperate zone, in fact a cold and frosty winter being adgvantageous for this crop rather than otherwise, which of course necessitates the keeping of a proper temperature in the crystallizers and they are of necessity steam jacketed. The same condition of steam heating being observed in Louisiana with the cooler car system; for instance when the cane crop is being

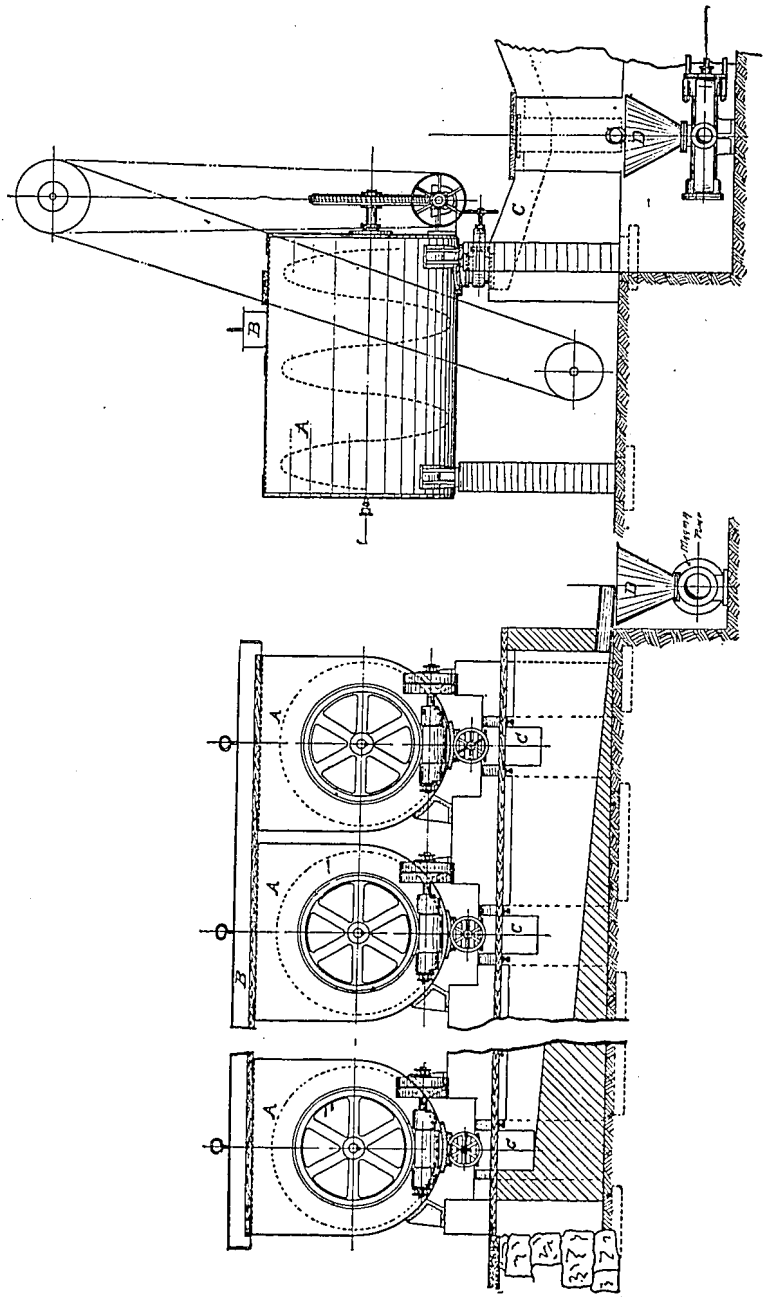
A
B
C
D

taken off a frost is a common occurrence and as a consequence the cooler car and hot room is a necessity. In the hot room construction of the Louisiana mills the walls are of double thickness filled with non-conducting material and a series of steam pipes surrounding the walls similar to the coil system in a cold storage room for refrigerating purposes. In most cane sugar growing countries which are naturally tropical this condition does not exist and good results are obtained without the use of steam jacketting, as well as the absence of the hot room.

It is contemplated with the Pacific Sugar Mill installation of crystallizers:

1st. To reduce the sucrose loss in the waste molasses, this loss with the cooler car and cistern method may approximate from 10 to 12 per cent. where there is a limited storage capacity.

The above mentioned loss in our modern mills does not exceed from 4 to 6 per cent.

2nd. The handling of this product mechanically instead of by manual labor as with cooler cars, thereby saving this expense.

3rd. The working up of this low grade product while the mill is in continuous operation saving this cost of labor, fuel, etc., of later drying off. The writer visited a mill some time ago that was engaged in "drying off" the low grade of this season's crop six weeks after the mill had finished grinding, and further still had some 1906 molasses to deal with.

Mr. John Watt, manager of Olaa Plantation, states in reference to Crystallizers, "That in 70 hours after the grinding is stopped all of the sugar is in the bags," and the season's mill work is completed.

SUGAR DRYERS.

There is still quite a difference of opinion among our plantation people as to the question of the use of a dryer. Some of our sugar men claim that if the sugar is properly dried in the centrifugals there is no reason for deterioration in the long sea voyage from Hawaii to the Atlantic Coast; others claiming that with making one grade sugar of 96 polarization, it is only a question of time when a ferment will make its appearance which will affect the keeping powers of the sugar, and the only safeguard to prevent the deterioration of sugar in shipment is that it be properly dried with some type of a dryer. As a proof of this argument our chemists refer to reports on Cuban sugars, which in from four to six months the sugar from the different estates enumerated has deteriorated from three to seven points.

SUGAR REFINING.

The present year has seen the installation at the Honolulu Plantation, Aiea, of a complete Bone Char Filter Plant, for the making of white sugar. This plant had a preliminary run at the end of the present grinding season, the result being all that was anticipated. This is the first actual refinery that has been installed or operated in these islands, and the results from the same will be looked forward to with much interest. For the present the product will be white granulated sugar only, and the installation of the necessary machinery for the manufacture of cubes, dominos, powdered and other varieties of marketable sugars will, of course, be a very simple matter, if the trade requirements demand it.

PUMPING MACHINERY.

Within the past two years the installation of the electrically driven pumps at McBryde Plantation has been a source of interest to the planters and to the engineering community at large; in fact the installation of this machinery suggests a possibility of operating all of the pumps on any one of our large plantations from a central station in which the generated power would be by steam, and the different stations equipped with turbine pumps electrically driven from the central station.

This system of pumping was first introduced in the Santa Clara Valley, California, in 1894 in which two ordinary centrifugal pumps were connected up in series, or in other words one pump delivering into the other for a lift of 160 feet to replace a pumping system which had been very troublesome on account of the sand in the water supply; the results were highly satisfactory although belt driven. Later with the development of electric transmission the Sultzer M. Co. of Switzerland installed a set of four step pumps for a very deep mine in Spain which was being reopened. It was found that the installation of ordinary mine pumping machinery as used for this purpose was prohibitive on account of the cost due to the low plunger speed of the ordinary type of mining pump, and that while the electrical installation was less efficient, at the same time the saving in the first cost and interest on the cost of installation was more than off-set by the electrically driven pumping system.

As a matter of information I beg to submit the following tabulated weights of the multiple stage centrifugal pumps at the McBryde Plantation in comparison with the weights of steam driven plants of the same power, exclusive, of course, of the boilers:

ELECTRIC STATIONS NOS. 1 AND 2.

No. 1. Capacity, 6,500,000 gallons per 24 hours;
Height, 268 feet.
No. 2. Capacity, 5,000,000 gallons per 24 hours;
Height, 240 feet;
Weight of machinery including motor in each of above plants, 19½ tons.
A triple expansion steam driven plunger pumping plant of the same power and capacity would weigh approximately 100 tons.

ELECTRIC STATION NO. 4.

Capacity of 3,500,000 gallons per 24 hours.
Height 178 feet;
Weight of machinery, including motor, 8½ tons.
A compound condensing pumping plant of the same power and capacity would approximate 45 tons.

ELECTRIC STATION NO. 6.

Capacity, 3,000,000 gallons per 24 hours;
Height, 400 feet;
Weight of machinery, including motor, 17¾ tons.
A triple expansion pumping plant of the same power and capacity would approximate 80 tons.

The above gives a general idea of the dimensions of this system of pumping machinery in comparison with the steam driven pumps now in use on our plantations.

GENERAL MILL NOTES.

Hakalau Plantation.

The past season has seen the working of a twelve-roller milling plant at Hakalau Plantation, the results of which have more than equaled expectations in many ways. While it was thought that the additional engine required for the operation of the fourth mill might cause some difficulty by a surplus of exhaust steam, it was found, however, that this additional exhaust was used to better advantage in the evaporator, and in fact saved the use of live steam in the vacuum pans, and further the dryer crushing due to the fourth mill made the fuel more efficient so that the results as regards the fuel and steam questions, etc., have proven a great improvement over previous working conditions at the Hakalau Mill.

Waialua Agricultural Co.

The Waialua Agricultural Co. is at the present time installing an additional three-roller mill which will give them a twelve-roller milling plant with crusher, the desideratum being better extraction, with less maceration and increased milling capacity.

Onomea Mill.

At the Onomea Plantation the milling plant is being completely reconstructed and a Krajewski Crusher installed, the crusher now being a necessity in every mill with the Caledonia cane, which requires preliminary crushing or preparation for the mills, more so than the Lahaina and other varieties on account of its high fiber contents.

Wailuku Mill.

The new Wailuku Mill took off its first crop this season. There was considerable amount of difficulty at the commencement of the run with the ball bearings of the water driven centrifugals. The bearings fitted to the machines being inadequate for the work, this difficulty, however, was fully overcome after the refitting of these bearings, and no doubt this construction of bearings will meet with much favor in the large machines in future. As an example with the 40" water driven centrifugals it was found on replacing the washer bearings with ball bearings that the speed was increased 200 R. P. M. with the same water pressure in the supply mains, to which must be added the important fact in sugar drying, viz., the machines getting up to speed in shorter time.

WIRE LANDINGS.

It will, perhaps, not be out of place in this report to call attention to the development of this means of loading and unloading steamers and vessels along the coast line of the islands which are practically devoid of harbors. We are indebted to Capt. Wm. Matson of the Matson Navigation Co. and the late Mr. R. R. Hind for the introduction of this system of freight handling. While the first wire landings installed were not in some cases as satisfactory as had been hoped for, still the principles were on the right lines and only required that they be adapted to local conditions. After some years of experience and careful attention to details on the part of the plantations and steamship people great improvements have been made and the new Papaikou landing represents the latest develop-

ment in this direction, a duplicate of which is now being installed at the Paauhau landing.

The length of run from wharf to steamer at Papaikou is about 600 feet and a round trip of the trolley can be made in one minute, that is thirty-two bags of sugar or two tons in weight can be taken off the cars at the landing, delivered on board the steamer and make the return trip ready for the next sling. This speed is faster than the sugar can be stowed ordinarily, so that the question with this admirable system is one entirely of handling aboard the steamers or at the landing, and the question of weather, suitable boatmen, etc., is practically eliminated. It is not uncommon for a coasting steamer to be anchored for days off a landing on the Hamakua or Hilo Coast waiting for a heavy surf to go down, the weather otherwise being perfect for shipping purposes. With the trolley system there is a permanent service wire outside the surf or breakers which permits of connecting up the vessel with the shore, so as to proceed with the work of loading or unloading as the case may be, when it might not be possible to get near the ordinary loading crane, with boats.

The installation of this system at Paauhau will be of great interest to the landings in that vicinity as well as elsewhere.

Respectfully submitted,

W. J. DYER.

ON THE SWEATING OF RAW SUGAR.

By the "sweating" of sugar is understood that alteration in the character of the bagged goods which causes moisture to exude from the sugars and stain the bags.

What is "sweating?"

The answer to this depends upon the individual. A learned doctor from an Experiment Station will probably say that it is due to the presence of a bacterium, "Leuconostoc Mesenteroides," or some other jail-bird, and will launch forth on the precautions to be adopted in the manufacture of sugar to prevent the existence of the germs in the propagating medium to the end that the detrimental presence of the micro-organism being eliminated the sugars will remain good.

An old experienced sea-captain will likely say that if the sugar is shipped in good condition, and the hatches are kept tight, no damage will result to the goods on a long voyage; another one equally experienced will recommend that the hatches be removed during fine weather and the holds given good ventilation.

A plantation manager situated on the lee side of one of the islands will probably say that he is not troubled with sweat except in southerly weather, and his sugar-boiler will take

considerable credit to himself in that his sugars do not sweat; while other managers situated on the weather side of the islands will say that although their sugars are well made, polarize high, contain only small percentage of moisture, still they sweat on the slightest provocation.

We do not know for certain what causes sweating in stored sugars in every case; it is probable that there are many causes, such as poor treatment during manufacture resulting in a soft grain, and the molasses adhering to the grain of such a nature that fermentation may be easily induced. This is very likely responsible for that class of sweating which results in a drop in polarization and a serious loss in weight owing to the fermentation, and disappearance of sugar as carbonic acid gas and alcohol. In such sugars the germs of ferment may be present in the molasses, and the "sweat" extends through to the center of the containers.

Another cause may be storing sugars in poorly built warehouses exposed to dampness and moist high winds. High class No. 1 sugars have the power of attracting moisture from the atmosphere, and when even the best No. 1 sugars are thus exposed, sweating invariably follows.

The presence of a noxious bacterium in sugar juices, and the same being thus introduced into the manufactured article is no doubt responsible for some damage, but it would seem to be going far afield in search for reasons to conclude that this is at all general.

The conditions of transportation have been so unusual during the past season that sweat damage to stored sugars is more in evidence now than it has ever been in the past, and those who are compelled to store sugar in unfavorable localities should give the matter careful study.

Rebagging sweated sugars without working them over does little good, excepting only that the steamers will accept them in "apparent good condition." But as these sugars are paid for at destination in accordance with the polarization, and as no claims can lie against the carrier for sweat damage, it would appear that the gain by rebagging sweated sugars is hardly warranted in view of its cost, unless indeed the factories are in operation, in which case all sugars at all damaged by sweat should be worked over.

The results of careful observation show that where sugars are manufactured with care there is little or no danger of sweat damage from the presence of inimical micro-organisms; but that where sugars are stored in localities exposed to the usual trade winds which sweep over hundreds of miles of ocean and therefore are heavily laden with moisture, unless the warehouses are carefully built with double floors and tight walls and roof, sweating to a considerable extent will occur with the best and driest sugar that can be made.

On the other hand, warehouses situated on the southern sides of the islands do not need to be so carefully constructed, as the ordinary trade winds blow over the hills and undoubtedly lose a large portion of their moisture in so doing, so that sugars exposed in such localities do not absorb moisture for the reason the atmosphere has none to give up.

Instances of the first-named conditions can be seen on Maui at Paia, Puunene, Wailuku and Kahului; the O. R. & L. Co.'s warehouses at Honolulu, and Makaweli, Kauai, show the effect of trade winds after having crossed the high lands of the mentioned islands. On Maui, sugars sweated very badly in the warehouses while awaiting shipments; at Honolulu and Makaweli, on the contrary, no damage to speak of occurred, excepting in southerly weather to which those warehouses are particularly open.

J. N. S. WILLIAMS.

Kahului, Nov. 5, 1907.

Mr. Noel Deerr: "The Division of Agriculture and Chemistry for some months past has been working experimentally on the subject of the deterioration of sugars and we hope before a very long time to give the Planters' Association the results of our work in that connection. At present, I may say that we are inclined to attribute the deterioration of sugars to the combined effect of a micro-organism or micro-organisms and an excess of moisture.

Now as regards moisture, pure sugar, that is to say, chemically pure sugar, is not hygroscopic, but in the commercial product there are present various salts and other bodies which are hygroscopic and an excess of these bodies will account for certain sugars rapidly absorbing moisture when stored under unfavorable conditions. For example, if we are grinding canes damaged by insects we may expect to find acetic acid in the juice, which in the process of manufacture will appear as acetate of lime, an extremely hydroscopic salt, and to a body such as this may be attributed the sweating to which Mr. Williams has called attention.

"Now as regards drying, the sugar dryer will not, of course, remove the hygroscopic salts, but a sugar that has passed through a dryer will initially have a low percentage of moisture, and such a sugar will, I think, be an appreciably longer time in sweating or in going off than a sugar that has not passed through a dryer.

Mr. J. A. Scott: My experience has been that the sweating occurs just around the walls, principally on the ends of the bags projecting to the walls; we store from 25 to 30 bags high, and it is generally only the first five or ten bags in the lower tiers that are affected at all by sweating, and these are only around the walls. This year the boards of the walls have been ripped out and sheathed with paper to keep it entirely air proof to see if

that will have the effect of keeping the moisture out of the building.

Mr. John Watt, Manager of Olaa Plantation, stated that he had experienced a great deal of trouble with his sugar sweating, and finally a sample bag was sent to the Experiment Station. An investigation there showed bacteria in the sugar which was determined to be the principal cause for the sweating. At the end of the season, everything around the sugar house and mill was disinfected and Hersey dryers installed, after which no difficulty was experienced from this cause.

REPORT OF COMMITTEE IN CHARGE OF EXPERIMENT STATION.

To the President, Board of Trustees and Members of the Hawaiian Sugar Planters' Association:

The Committee in charge of the Experiment Station hereby submits its report for the twelve months ending September 30th, 1906:

DIVISION OF AGRICULTURE AND CHEMISTRY.

Laboratory Work.

The increase in the work of this branch of the Division, to which your attention was drawn last year, has been more than maintained during the past twelve months, the analyses furnished being no less than 55 per cent. greater than the total of 1906 In addition to this the falling off in the number of fertilizers analyzed has been arrested, and the total of 494 is the largest since this branch of work has been taken in hand by the Division; these fertilizer analyses have resulted in a saving of $8,977.00 to the plantations, or nearly twice that of last year. In this connection your Sub-Committee desires to draw especial attention to Mr. Eckart's remarks regarding the careful taking of samples, which may also be applied in some measure to soil-samples. The question of fertilization is an exceedingly complex one which occupies a great deal of the time and attention of the Station; there are so many factors which have to be taken into consideration before definite results can be recorded from experiments, and climatic and soil conditions have to be closely watched, the effect of variations in fertilizers and methods of application being infinitely more far-reaching than, and involving results very different from what may be conceived of even by those who have been for years closely connected with cane-growing and fertilization. We feel very strongly that more care and thoroughness should be shown by managers in taking soil-samples for submission to

the Station, that more complete experiments should be taken in hand by the various plantations, and that a more active interest should be taken in a question which is of such importance to the sugar industry, not only from a scientific, but also from a practical and economic standpoint.

Weekly Mill Reports.

It is gratifying to note a slight increase in the number of plantations taking part in these reports. The larger the number of those furnishing statistics, the greater the benefit accruing to the whole; there are still a number of mills which might participate in this exchange of reports to the mutual advantage of all. The suggestion of an annual synopsis is a valuable one, and should prove of considerable interest to such mills as have assisted in the compilation of these statistics.

Mill Control Work by Station Chemists.

This is practically a new departure on the part of the Division and should prove of considerable advantage to such mills as do not possess a chemist. Mr. Peck and Dr. Norris visited some eight plantations on the Island of Hawaii where they conducted tests with regard to the extraction, efficiency and other workings of mills and boiling-houses.

Seedling Canes.

The Planters' Association may well congratulate themselves and those who have had this work in charge on the successful way in which it has thus far been conducted and on the valuable results which have already been achieved. The large quantity of seedlings, 5,232 in number, which was originally set out, has been reduced to 355, this smaller number representing those varieties which have shown up especially well. This part of the work of the Division has received an immense amount of care and attention, very full data having been obtained and recorded as to the different characteristics of the various canes. We may confidently anticipate that several of these seedling varieties will prove superior to any cane that has hitherto been grown in these Islands. During the year selections of cuttings from these seedlings have been generally distributed to the plantations, in order that they may conduct their own experiments under the actual conditions under which they will ultimately be grown. Very full instructions accompanied the distribution of these varieties, and we would here emphasize the importance of managers adhering closely to these instructions in order that the best possible results may be obtained.

Artificial Hybridization of Canes.

Of especial interest in connection with the raising of seedling canes have been the experiments which have been conducted along

the line of artificial hybridization from two known varieties. In the majority of cases only the female parent of the seedling is known, but during the past year the Station has been successful in obtaining five hybrid seedlings both of whose parents have been selected and the plumes artificially pollinated. This is an exceedlingly delicate operation the success of which has been entirely due to the skill of those conducting and assisting in these experiments.

Stripping Tests.

These are being continued at the Station with ratoons, and it will be interesting to see how the final results will compare with the results obtained there from the plant cane harvested last year. Considerable divergence of opinion has been expressed by managers with regard to the efficacy of stripping; this is a matter on which each plantation might well conduct its own experiments, as it is very desirable for managers to convince themselves thoroughly that the large sums spent annually on this branch of field work are made up for by increased yields. In view of the very positive expression of opinion by this Division as to the undesirability of stripping as far as cane grown on the Station is concerned, it is a question deserving of the serious study of every manager, and while there are at this time seven plantations conducting experiments along this line, the number might be largely increased with advantage.

Planting Tests.

During his travels in Java this past year, Mr. Muir reported on the method in vogue there for testing seed-cane by density. The lengths of seed-cane are placed in a molasses solution of a certain density, and those lengths which float are discarded. Experiments have been started at the Station during the past year, and have also been recommended to the plantations. Naturally no results are available as yet, but it is interesting to note that whereas a density of 3 or 4 deg. Brix. is used in Java, with our superior canes here the density had to be increased to 13 deg. Brix. before a satisfactory proportion of the lengths would float.

Bulletins and Circulars.

The following publications have been issued by this Division during the past year:

CIRCULAR NO. 1. "Regulations of the Hawaiian Sugar Planters' Association Governing the Establishing and Conducting of Substations." This is a general plan and list of directions to guide those who have had in hand the laying out of the Substations throughout the Islands. It enters with considerable detail into such matters as the division of expense and responsibility, methods of laying out plats, planting, fertilizing, irrigating, etc.

CIRCULAR No. 2. "Proposed Plans for Field Experiments with Fertilizers." This gives a detailed method of laying out plats for making fertilizing experiments with various kinds of fertilizer in varying quantities.

CIRCULAR No. 3. "Nurseries for Seedling Canes,' is a short paper dealing with modifications of the original plan with respect to the distribution of seedlings.

CIRCULAR No. 4. "Hawaiian Seedlings from the Sowings of December, 1905." This is a very complete and exhaustive catalogue of the characteristics, sucrose contents, etc., of the selected seedlings dealt with in Circular No. 3.

CIRCULAR No. 5. "A Formula for Sugar House Control," is a technical work whose aim is to establish an expeditious basis free from systematic error for determining the results obtained from sugar-house work.

CIRCULAR No. 6. "Results of Fertilizer Tests on H. S. P. A. Substations." This circular, as its title implies, records certain results which have already been obtained from fertilization experiments with plant cane on the substations. These experiments are only in their infancy, and it is proposed to make them extend over a considerable period in order that final results may give reliable information.

BULLETIN No. 6. "A Theory of the Extraction of Sugar from Massecuites." The object of this Bulletin is to collect into an accessible form the data requisite for a systematic scheme of sugar-boiling and to establish some simple algebraical formulae connecting purity of massecuite and concentration to which it should be boiled to obtain the best results. The Bulletin contains a discussion on the process known as "Crystallization in Motion" and an apparatus called the "Brasmoscope."

From the foregoing it will be seen what an immense amount of work has been got through during the year by this Division. This has necessitated the almost constant presence of the Director at the Station, so that Mr. Eckart has found it difficult to get away even to see members of the Association in Honolulu, and impossible to get to the plantations on the other Islands. This is a state of affairs which it was hoped would have been remedied by the engagement of Mr. Noel Deerr as Assistant Director, but unfortunately Mr. Deerr has been seriously ill in hospital for a considerable period, and though he is now convalescent, it will be some time before he will be able to take an active share in the work of the Station. For the full account of that work during the past year we refer you to the report of the Director.

DIVISION OF ENTOMOLOGY.

Since the last Annual Report submitted by your Committee, this Division has continued its work in connection with the ento-

mological control of the Cane Leaf-Hopper and other insects injurious to sugar cane, besides attending to the indispensible work to which the Acting Director refers in his Report, and to which your attention is particularly directed.

Cane Borer.

The Acting Director's Report details to some extent the research work undertaken by Mr. Muir at the instance of this Division, in connection with finding the native home of our Cane Borer and allied species. Should he be successful in this, then it is expected that he will there find either parasitic or predatory insects which keep it under control. Unfortunately for us, very little is known to the scientific world regarding the locality where this insect is indigenous, and considerable ground may have to be gone over and much time consumed before Mr. Muir attains the object of his mission. In order to facilitate his work in this respect, your Committee has taken advantage of Dr. Perkins' presence in Europe to have him visit the large Museums there for the purpose of investigating to what extent they have in their collections specimens of Cane Borers, and to gather data as to where these were collected. Unfortunately, however, large quantities of material at some of the more important Museums, belonging to this, and allied groups of Borers, so Dr. Perkins informs us, have not been identified and in most instances have not even been unpacked. To classify and identify all such insects in these Museums, he states, would necessarily involve many months of work which it will be impossible for him to undertake under existing circumstances, even were he granted permission to do so by the Museums. Your Committee hopes, however, that in the limited time he has at his disposal in Europe, he will at least be able to gather important entomological information which will be of much assistance to Mr. Muir in guiding him to the desired locality where this insect has its native home. Another misfortune is that the section of wild and practically uncivilized region which Mr. Muir will probably have to explore, has never been properly investigated before by entomologists, and because of this, practically nothing is known of this special group of insects in which we are now so interested. For these reasons it is quite possible that Dr. Perkins may not find our species of Cane Borer present in the collections of European Museums from localities other than those into which we know it was introduced. Expeditions in search of parasites are always somewhat speculative and problematical, and not less so in the case of the Cane Borer, for the reasons mentioned in the Report of the Acting Director; yet, the importance to our plantations of this work is such that every effort should be expended before it is given up as hopeless. If successful eventually, the result will more than repay all the time, expense and patience which will have been invested on what must be considered a much more diffi-

cult problem than that of controlling the Cane Leaf-Hopper. The good results obtained in this latter respect should, however, give us great hopes that our entomologists will be equally sucgcessful with this, their new line of work. Before concluding remarks on this subject your Committee wishes to emphasize the importance of establishing a half-way Station at Hongkong or other shipping port midway between the Malay Group and these Islands, in order that fatal delays in the consignments of insects made by Mr. Muir may be obviated. Owing to the long distances and changes of climate between points, without such a half-way Station, it is practically impossible to successfully introduce such parasites or predators as it may be desirable to send. We have already had instances of this, two consignments having been sent by Mr. Muir, one of which was a total failure, although in the other, wonderful to relate, eight insects were received alive. For these reasons, therefore, your Committee will, as soon as the occasion requires it, ask of the Trustees authority to appoint, for a limited period only, an entomologist to be stationed at the half-way point mentioned.

Cane Leaf-Hopper.

It is pleasing to note the continued control of this pest by the egg and other parasites introduced here by our entomologists from Australia, China and Fiji. As soon as the half-way Station before mentioned has been established, it is also quite possible that one or more new parasites on the eggs of the Hopper, as well as new predaceous species of insects, may be introduced from Java and adjacent territory where, your Committee understands, our species of Leaf-Hopper has been seen on cultivated cane, but is at the same time controlled there by its natural enemies as it now is here.

Your Committee wishes particularly to emphasize the necessity of the continuation by the Managers of the breeding up of parasites on their respective plantations, and the methodical and frequent distribution of these in the young cane as occasion requires. In the Committee's Report for last year it was said (Page 9) "Leaf-Hopper conditions in fields of young cane should never be allowed to be such that the first generation of the hopper attacking the cane cannot be controlled by the parasites there present. If there is no such control then the Manager must expect a very severe attack of the pest in these fields until such time as the parasites have had an opportunity to practically outnumber the hoppers." Restocking of these egg-parasites has been methodically undertaken by very many of the plantation Managers with the result of obviating the delay which must necessarily ensue if the Station is relied upon at each occasion of need. When the Hoppers commence to lay in a young field where, of course, there will be no parasites, the *prompt* restocking by the Manager will prevent the Hopper-eggs from hatch-

ing except in very small quantities, whereas the neglect to do this, or the delay resulting from sending to the Station for fresh colonies, will certainly, in most cases result in an enormous crop of hoppers and consequent heavy damage to the cane in that field.

DIVISION OF PHYSIOLOGY AND PATHOLOGY.

Organization and Staff.

During the year, in pursuance of the understanding had at the time of his engagement with the Hawaiian Sugar Planters' Association, Director N. A. Cobb, resigned as Director of the Division, to accept the position as Chief of the Division of Crop Technology of the United States Department of Agriculture. His services in establishing and organizing the Division of Pathology and Physiology, were invaluable, and this Association and the agricultural industries of this country have suffered a loss in his departure.

Mr. E. M. Grosse, the assistant to the Director, and artist at the Station, who has done such excellent illustrating for the Bulletins of the Station, resigned, to return to Australia, and we believe it will be very difficult for the Station to obtain another man as qualified to fill the position that he occupied.

Mr. Lewton-Brain is now the Director of this Division, assisted by Doctor Harold L. Lyon, who came to the Station from the University of Minnesota in September; and the Division as at present organized is doiag excellent work.

Publications.

The following are the publications of the Division for the year:

Bulletin No. 7, entitled "A Lecture on Rind Disease of the Sugar Cane." Pp. 38 and vi, with 16 illustrations in the text.

Circular No. 4, entitled "Notes on the Collection of Specimens of Root Fungi." 8 pages, and one original plate.

Circular No. 5, entitled "The Sugar-Cane Disease Known as Top Rot." 7 pages.

Circular No. 6, entitled "The Leaf Disease of Sugar-Cane Known as Eye-Spot." 7 pages.

Circular No. 7, entitled "The Disease of Sugar-Cane Known as Red Rot of the Stem," with two illustrations. 8 pages.

Two further bulletins are in course of preparation.

Experimental Work.

The work conducted by this Division is still very largely along the lines of *investigation*. The Division of Pathology and Physiology has been in existence for about two and one half years, and the very slight extent that cane disease here had been

studied previously, opened a wide and rich field for the professional investigator, and so far as this subject is concerned the greatest need has been, and for some time to come undoubtedly will continue to be, investigation.

The work of this branch of the Station covers very broad grounds, not only in the study and investigation of the disease of sugar cane, but also in the examination of other plants, submitted through the agricultural departments of the Territory, and in the assistance given to the Territorial Department of inspection of plant importations; this latter work we consider one of the most important matters, as by careful inspection we are enabled to keep out such of the few serious cane diseases that we are fortunately not yet afflicted with.

Circulars have been issued from time to time covering the information obtained in regard to the various sugar cane diseases and in addition describing diseases which are suspected to be in the fields, and in regard to which no information is at hand, and requesting that the managers of plantations observe and report thereon.

Circular No. 4 dealt with the discovery of the fructifications of *Marasmius sacchari*; Circular No. 5 with the bacterial disease called "Top Rot"; Circular No. 6 with the leaf disease known as "Eye Spot," sometimes called "rust," and Circular No. 7 with "Red Rot."

All of these circulars have contained requests for information upon the subject, dealt with, and the Committee take this occasion of urging upon the Managers of plantations, that if such information is available it should be immediately communicated to the Director of the Division. Furthermore, for many obvious reasons the Managers should report any diseased condition of the cane, and should send samples thereof to the Director. It would seem that we have here most of the known serious sugar-cane diseases, many of which, however, do no damage which is apparent to the unskilled observer, but in reality cause a great deal of loss which is frequently attributed to other sources. For instance, the red rot, while causing no perceptible damage to the cane stalk, other than a slight discoloration, effects a loss by inversion of the sugar. It is apparent, therefore, that the Managers should be alert to report any unusual or extraordinary conditions, whether they believe the reasons are apparent or not.

One of the most serious of sugar-cane leaf diseases in the Islands is that of "eye-spot," which early in the year seriously affected certain of the Hawaiian seedling canes growing at the Station; an excellent opportunity was thus afforded to pass upon the re-

sistant qualities of these canes as to this disease. The inspection and testing of new varieties of canes from the point of view of their resistance to diseases will be one of the important lines of work of this Division.

Very careful experiments have been conducted to ascertain the effect of the application of fungicides to cane cuttings before planting, and the value of Bordeaux mixture in this connection has been demonstrated. These experiments will receive continued attention and it will be the endeavor of this Division to inaugurate such experiments on a large scale on the plantations. These will be conducted under the supervision of the Director or his Assistant, and will afford definite proof of the value and practicability of the treatment under plantation conditions.

The Director of the Division has also rendered assistance to the Division of Agriculture and Chemistry in the raising of hybrid seedlings. As is well known Mr. Lewton-Brain in 1904, while then in Barbados, performed experiments in artificial cross-pollination, and was successful in raising a few of these canes, this being the first experiment along this line that had produced results. His knowledge and experience in this matter were, therefore, very valuable to the Station.

CONCLUSIONS.

In the Experiment Station of the Hawaiian Sugar Planters' Association, the sugar industry of these Islands has a most valuable and indispensable aid and protection in the cultivation of cane, and the manufacture of sugar, and your committee most strongly urges that the fullest advantage be taken of the aid and protection thus afforded. The most skilled investigators in their respective lines, that are obtainable, are at the service of the plantations of the Association, and we are not overstating, when we assert that in no sugar-growing country is there an experiment station so well equipped in all respects as the one you have established.

In September, of this year, the Committee of the Experiment Station was increased to seven members, and sub-committees thereof appointed to take charge of the three Divisions of the Station, with the Chairman of the general Committee ex-officio a member of each sub-committee. Regular meetings of the Committee are held and minutes thereof kept. It is believed that this method of conducting the affairs of the Station, by bringing more of the Trustees in direct connection with the work, will awaken a greater and more widespread interest in the Station, and be helpful to those wro are conducting the work there.

Your Committee, in closing this report, wishes to express its belief that the work of the Station during the past year has pro-

ceeded in a most satisfactory manner, and that the Association is to be congratulated that we have a staff of men who know the methods and meaning of research, and who are broadly and thoroughly trained in the agricultural investigations that we are conducting.

Respectfully submitted,

E. T. TENNEY,
Chairman.

G. H. ROBERTSON,
G. F. DAVIES,
Sub-committee Division of Agriculture and Chemistry.

W. M. GIFFARD,
W. PFOTENHAUER,
Sub-committee Division of Entomology.

E. E. PAXTON,
R. D. MEAD,
Sub-committee Division of Pathology and Physiology.

Experiment Station Committee.

Honolulu, October 1, 1907.

In connection with the report of the Experiment Station much discussion was had on the question of stripping cane, and it would seem quite impossible to arrive at any definite general conclusion as to whether it is advisable or not to continue this practice. The local conditions of climate and soil are so widely divergent that in this regard what may be good for one plantation, may be disastrous, or merely a waste of money for another plantation differently located.

REPORT OF COMMITTEE ON FORESTRY.

The year 1907 has been one of progress and development in connection with forestry in Hawaii.

The forest reserve policy of the government has been steadily pursued, several important reserves having been added to those already existing. A detailed statement concerning what has been done in this respect will be submitted to the Association by Mr. Ralph S. Hosmer, the superintendent of forestry.

The year has been marked by a considerable increase in the number of persons who have taken advantage of the offer of the Board of Forestry to furnish free professional advice as to

location of forest planting, kinds of trees best adapted to given localities and assistance in ways and means of establishing local nurseries and planting out trees. This interest has been especially manifested by plantation and ranch managers.

FOUR EVENTS IN FORESTRY DEVELOPMENT.

Four distinct matters relating to forestry have come to the front during this year, which are deserving of the attention of this Association. These are as follows:

First, a compilation and publication by the Federal forest authorities of statistics showing that the lumber forests of the United States, will, at only the present rate of consumption, last only about thirty years more, and that the hard wood supply of the United States is already practically exhausted, with a hard-wood famine, not only in prospect, but actually at hand.

Second, a definite formulation by the Superintendent of Forestry of Hawaii, in a report concerning a proposition to lumber the woods back of Hilo, Hawaii, of a policy concerning lumbering forests which are primarily needed as protection to water-shed as distinguished from a forest on an area from which there is no normal water flow; and the adoption of the policy so formulated by the Board of Agriculture and its approval by the Governor.

Third, the negotiation by the Hawaiian Mahogany Lumber Company, an Hawaiian corporation, of a contract with the Atchison, Topeka & Santa Fé Railroad Company, under which the former has undertaken to deliver to the latter something over 500,000 Ohia railroad ties per annum for the next five years.

Fourth, the demonstration, on a large scale, that Rubber grows well in Hawaii and can be made a profitable industry here; with the incidental effect that a large area will be planted up in rubber trees, which, from a forest protection of the land standpoint, are as good as any other variety of trees.

All of these four matters are of vital interest, not only to the citizens of the Territory of Hawaii at large, but especially to the sugar planters, as I will seek to hereinafter show.

Taking up the above subjects in the order named:

PINCHOT ON FOREST FAILURE.

FIRST. THE LUMBER SHORTAGE AND HARD-WOOD FAMINE IN THE UNITED STATES.

Gifford Pinchot, chief of the United States Forest Service, in an article published in The Outlook for October 12, 1907, makes the following statement:

After enumerating the statistics showing the amount of standing timber now in the United States; the present annual consumption and the present annual growth, he states:

* * * "The result shows a probable duration of our supplies of timber of not more than thirty-three years.

"Estimates of this kind are almost inevitably misleading. For example, it is certain that the rate of consumption of timber will increase enormously in the future, as it has in the past, so long as supplies remain to draw upon. Exact knowledge of many other factors is needed before closely accurate results can be obtained. The figures cited are, however, sufficiently reliable to make it certain that the United States has already crossed the verge of a timber famine so severe that its blighting effects will be felt in every household in the land.

"The rise in the price of lumber which marked the opening of the present century is the beginning of a vastly greater and more rapid rise which is to come.

"We must necessarily begin to suffer from the scarcity of timber long before our supplies are completely exhausted.

"It is well to remember that there is no foreign source from which we can draw cheap and abundant supplies of timber to meet a demand per capita so large as to be without parallel in the world, and that the suffering which will result from the progressive failure of our timber was but faintly foreshadowed by the recent temporary scarcity of coal.

WHEN THE FORESTS FAIL.

"What will happen when the forests fail?

"In the first place, the business of lumbering will disappear. It is now the fourth greatest industry in the United States.

"All forms of building industries will suffer with it, and the occupants of houses, offices, and stores must pay the added cost.

"Mining will become vastly more expensive; and with the rise in the cost of mining there must follow a corresponding rise in the price of coal, iron, and other minerals.

"The railways, which have, as yet, failed entirely to develop a satisfactory substitute for the wooden tie (and must, in the opinion of their best engineers, continue to fail), will be profoundly affected, and the cost of transportation will suffer a corresponding increase.

"Water power for lighting, manufacturing and transportation, and the movement of freight and passengers by inland waterways, will be affected still more directly than the steam railways.

"The cultivation of the soil, with or without irrigation, will be hampered by the increased cost of agricultural tools, fenc-

ing, and the wood needed for other purposes about a farm. Irrigated agriculture will suffer most of all for the destruction of the forests means the loss of the waters as surely as night follows day.

"With the rise in the cost of producing food, the cost of food itself will rise. Commerce in general will necessarily be affected by the difficulties of the primary industries upon which it depends.

A SUICIDAL POLICY.

"In a word, when the forests fail, the daily life of the average citizen will inevitably feel the pinch on every side. And the forests have already begun to fail, as the direct result of the suicidal policy of forest destruction which the people of the United States have allowed themselves to pursue. * * *

"We are accustomed, and rightly accustomed, to take pride in the vigorous and healthful growth of the United States, and in its vast promise for the future. Yet we are making no preparation to realize what we so easily and glibly foresee and predict. The vast possibilities of our great future will become realities only if we make ourselves, in a sense, responsible for that future.

"The planned and orderly development and conservation of our natural resources is the first duty of the United States."

MORE EXPERT EVIDENCE.

In a report on the timber supply of the United States, made by R. S. Kellogg of the Federal Forest Service in April, 1897, he makes the following statements:

"The lavish manner in which the United States has consumed the products of its forests and the rapidity with which our timber supply is melting away are wholly unappreciated by those who have never given the matter more than passing consideration. * * *

"Rapidly as the population of the United States has increased the lumber consumption has increased still more rapidly. In round numbers, the lumber cut in 1880 was 18 billion feet; in 1890, 24 billion feet, and in 1900, 35 billion feet. The increase in population from 1880 to 1900 was 52% but in lumber cut 94%.

"The original stand of white pine in the Northeast, is almost entirely cut out. The present stand in the Northeastern States is mainly spruce, second-growth white pine and hemlock. * * *

"It is well known that the days of white pine are rapidly passing and * * * it will in a few years cease to be a large factor in the timber supply of the United States.

SAW MILLS GO OUT OF BUSINESS.

"At the last annual meeting of the Northern Pine Manufacturers' Association in Minneapolis, Minnesota, the secretary presented the following statement:

"'Since 1895, 248 firms, representing an annual output of pine lumber of 4¼ billion feet, have retired from business, due to the exhaustion of their timber supply. Plants representing approximately 500 million feet capacity which sawed in 1906 will not be operated in 1907.'

"The amount of hardwood stumpage is rapidly decreasing. The hardwood cut in 1900 was 8 billion feet, in 1904, 6 billion feet, and the present annual cut of hardwoods is about 5 billion feet.

"As an instance of the timber shortage in the East it is stated that in New England 6 inches is now a common cutting diameter for white pine, while formerly, and where lumbering is intelligently done, 18 inches is the minimum limit.

"We are rapidly using up our forest capital. Our present annual consumption of wood in all forms is from three to four times as great as the annual increment of our forests. * * * Every indication points to the fact that under present conditions the maximum annual yield of forest products for the country as a whole has been reached, and that in a comparatively short time there will be a marked decrease in the total output, as there is now in several items. Neither is there any great supply of timber to turn to outside of the United States. With the exception of importations of small quantities of high-class woods like mahogany, the only promising source is Canada; but most of the timber there will be required at home. Even now Douglas fir (Northwest) is bringing higher prices in Canada than in American markets."

DR. FERNOW ON THE LUMBER SHORTAGE.

In February, 1907, Dr. B. E. Fernow, one of the leading forestry authorities in the United States, made the following statement in an article published in Forestry and Irrigation for February, 1907:

"One hundred and fifty years ago Germany found herself in very much the same condition as regards her forest resources as we are today in the United States—all accessible portions more or less culled, or in poor coppice, burnt over, and damaged by cattle, the valuable virgin timber mostly confined to distant and inaccessible locations. Sporadic attempts existed here and there at protection, at regulation of the cut, at conservative lumbering, and still more sporadic attempts at reforestation. * * * Yet until the beginning of the

nineteenth century reduction of supplies without adequate reproduction proceeded, and around the year 1800 the wood famine had become acute, giving rise to the same kind of agitation and literature which we have experienced, even to bringing in the catalpa, and other such small rapid growers as the saviors of the nation.'

PROFITABLE FORESTRY IN EUROPE.

"The severity of the timber shortage in Germany at that time was temporarily relieved through increased production of coal and the building of railroads in hitherto inaccessible forest regions. Then came the vigorous organization of a settled policy of forest management, based upon the principle of sustained yield, or the cutting of the increment only, without lessening the wood capital. The results of this policy were that in Saxony the cut increased between the years 1820 and 1890 just 50%, and up to 1904 has increased by another 5%.

"In Prussia, in 1830, the cut was 20 cubic feet per acre, and in 1865 increased to only 24 cubic feet. In 1890 it was 52, and in 1904 it had grown to 65 cubic feet. Forest management increased the average acre production in 75 years more than threefold.

"Every acre of forest in Germany—State, Municipal and private; good, bad and indifferent, productive and unproductive, now yields an average net profit of $2.40 per acre annually, representing 5% on a valuation of $50 per acre, and this is constantly improving.

"It must not be overlooked that these results have come largely from non-agricultural lands, the sandy plains, the swamps, the rough mountain slopes, and from forests which were mismanaged like ours.

"Can we expect to attain the same or similar results?

"We ought to do much better, for we have the hundred years of experience of our friends across the water to draw on and we can avoid many of the mistakes which they have naturally made and paid for."

HALL ON THE HARDWOOD FAMINE.

In the report by William L. Hall, assistant forester of the United States, on "The Waning Hardwood Supply of the United States * * *" dated September 24, 1907, and which has just arrived in Honolulu, he makes the statement that the cut of hardwood lumber in the United States decreased 15 per cent. between 1899 and 1906.

"This decrease took place during a period when American industries sprang forward at a pace unparalleled; when there

was the strongest demand ever known for every class of structural material; when the output of pig iron increased 15 per cent., that of cement 132 per cent. and even that of soft-wood timber 15 per cent.

"That the decrease is due to diminished supply rather than to lessened demand seems to be proved beyond question. During the same period the wholesale price of various classes of hardwood lumber advanced from 25 to 65 per cent.; every kind of hardwood found in quantity sufficient to make it useful has been put on the market, and hardwood timber is now being cut in every State and every locality where it exists in quantity large enough to be cut with profit. These conditions could not prevail were the decrease in production due to a falling off in demand.

DECREASE OF HARDWOOD SUPPLY.

"Since 1899 the production of oak has decreased 36 per cent.; of yellow poplar, 37 per cent.; of elm, 50 per cent.; of cottonwood, 36 per cent. and of ash 20 per cent."

It is stated that the shortage is being made up by resorting to the inferior hardwoods, and, "although almost all possible new woods have been brought into use there has still been a shrinkage in the total output of 15 per cent.

"The supply in Indiana and Ohio, the original center of hardwood production, is practically exhausted. * * * In all of the States West of the Mississippi Valley the supply is small and can never become much of a factor. The impressive thing is that we are bringing hardwoods from far and near, and still the cut is going down.

"The southern part of Michigan, which originally bore magnificent hardwoods, was the first part of the State to be cleared. * * * The same is true of Wisconsin and Minnesota. The almost complete exhaustion of their timber supply and the transformation of their hardwood lands into farms are apparently the only results to be expected. * * * In the Appalachian, as in the other regions, the hardwood lumbermen are working upon the remnants. The supply is getting short and the end is coming into sight."

ONLY SIXTEEN YEARS' SUPPLY LEFT.

Mr. Hall estimates that from the statistics of present supply of hardwood and present annual use of the same there exist in the United States today only sixteen years' supply.

He says that since 1898 the price of hard maple per thousand feet board measure has increased from $20 to $32.50 per thousand; of yellow poplar, from $30 to $53.50 per thousand;

of hickory, from $45 to $65 per thousand, and of quartered white oak, from $60 to $80 per thousand.

Accompanying this increase in price has been a lowering of the standard.

Prior to 1907 the rules of the trade required even lengths, with a minimum length of 6 feet. In 1907 the Hardwood Lumber Association reduced the minimum to lengths of 4 feet and allowed odd lengths.

"IT EMPHASIZES THE FACT THAT WE ARE DOWN TO THE ROCK BOTTOM AND REQUIRE EVERY SOUND PIECE OF HARDWOOD LUMBER THAT CAN BE PUT UPON THE MARKET."

Between 1899 and 1906 the number of employes in the hardwood industry in Ohio decreased 40 per cent. and in Indiana 42 per cent.

An enumeration is given of the businesses directly depending upon hardwood, viz: Lumber, cooperage, furniture, vehicles, musical instruments, small wooden-ware, agricultural implements, cars, boxes and crates, railroad ties, telephone and telegraph poles and house finishing.

Mr. Hall concludes:

"The exhaustion of the hardwood supply means the loss of these industries to the States in which they are located. * * * How intensely the whole country would feel the loss of its hardwood timber * * * can scarcely be realized. * * * A general failure in crops may affect industrial conditions for a few years—a failure in the hardwood supply would be a blight upon our industries through more than a generation.

THE SITUATION IN BRIEF.

"The situation in brief is this: We have about a fifteen years' supply of hardwood lumber now ready to cut. * * * The inevitable conclusion is that there are lean years close ahead in the use of hardwood timber. There is to be a gap in the supply which exists and the supply which will have to be provided. How large that gap will be, depends upon how soon and how effectively we begin to make provision for the future supply. The present indications are that in spite of the best we can do there will be a shortage of hardwoods running through at least fifteen years. How acute that shortage may become and how serious a check it will put upon the industries concerned cannot now be foretold. That it will strike at the very foundation of some of the country's most important industries is unquestionable. This much is true beyond doubt, that we are dangerously near a hardwood famine and have made no provision against it."

After designating possible substitutes for hardwoods, such as metal, concrete and softwoods, Mr. Hall says:

THE ONLY PRACTICABLE SOLUTION.

"There seems to be but one practicable solution, and that is to maintain permanently, under a proper system of forestry, a sufficient area of hardwood land to produce by growth a large proportion of the hardwood timber which the nation requires. * * * The longer the delay in putting the forest under control, the longer continued and more extreme will be the shortage."

The foregoing statements are those of professional salaried experts, with nothing to gain by exaggeration, and are based upon statistics made with all the exhaustive resources of the United States Treasury.

These statistics are brought right up to the year 1907, and bring home to us, as nothing that I have yet seen does, the fact that not only forest protection but forest reproduction is of vital import to the sugar industry, as well as every other industry in Hawaii.

We have for years been unthinkingly cutting off our forests for firewood; devastating them with cattle; carelessly allowing their destruction by wild goats, and paying practically no attention to reforesting: while we have imported not only all kinds of both soft and hardwood, both manufactured and unmanufactured, for general domestic use, but have also been importing even our railroad ties, telephone poles and fence posts.

Within the year we have been brought up against the fact that not only have prices gone ballooning, but that even railroad ties and fence posts are hard to obtain even at the advanced prices. If prices of lumber in general, and hardwood in particular, are going to be prohibitory in the United States, where the material is produced, they are going to be more so here, where the added freight must be reckoned with.

THE REMEDY IN HAWAII.

What is the remedy?

There is and can be only one remedy. It is the same here that it is in the United States, and the same there that it was in Europe when they faced the same condition a hundred years ago.

The remedy is to stop unnecessary destruction of forests and immediately begin reforestation, both by protection of semi-forested areas, so that partly destroyed forests will return by natural means; and by replanting.

This should be done both through the medium of private effort and public appropriation.

It lies within the power of every sugar plantation and every cattle ranch in the Territory to, within the year, at an expense so small that it bears no comparison to the benefits to be derived, shut out cattle from every portion of the land which ought to be in forest, and, if no more is done, to plant along roadways, around house-lots, in gulches, waste land and on steep hill sides unsuitable for agriculture, trees enough to, within the next ten years, supply a very large proportion, if not the whole of the fence posts, railroad ties, telephone poles and firewood needed for consumption in the Territory.

RAPID GROWING HARDWOODS.

The few years during which there has been a skeleton of a forestry department maintained by the government in Hawaii has demonstrated that we have available a highly valuable assortment of rapid growing hardwood trees, such as a number of the varieties of the eucalypti, the iron woods, the silver oak and some of the acacias, besides that most valuable lumber tree, the Japanese pine.

We do not need any statistics or foreign expert advice upon this subject. The forestry experiments which have been carried on by the government on the ridges back of Honolulu; by the Lihue Plantation and George Wilcox on Kauai; by the Baldwin plantations; the Haleakala Ranch and by Captain Makee at Ulupalakua on the island of Maui, and by the Pacific Sugar Company on Hawaii, have already demonstrated what these trees will do.

RESULTS ON HALEAKALA RANCH.

As to what can be accomplished by continuous effort at small expense, I speak only as to my own knowledge in connection with the Haleakala Ranch on Maui, where, within the past seven years, at an expense of less than $500 a year, there have been planted out and are now growing well about 60,000 trees, which are already beginning to yield timber for fencing and all necessary ranching purposes.

During the past summer on this ranch there were cut from thirty-three second-growth rastrada eucalyptus trees 230 good fence posts.

There is no reason why equally good results cannot be obtained almost anywhere on the islands.

Private work on forests is within the immediate control of individuals and corporations, but public work of this kind requires legislative appropriation.

REFORESTING APPROPRIATIONS NEEDED.

Up to the present time the Hawaiian Legislature has contented itself with appropriations for forest purposes barely sufficient to maintain a skeleton organization, without sufficient funds to take up the active work of reforesting.

To obtain appropriations for this purpose requires a public enlightenment and support from that portion of the community which recognizes the necessity of the situation.

There is no organization in the Territory which compares with the Planters' Association in power to bring to bear upon the legislature intelligent public opinion and influence.

I submit that not only should the Association pass resolutions to be presented to the legislature, in support of appropriations for reforesting, but that in their own interests, individual members should use their private influence in support of such a policy.

MEN AND METHODS ARE AVAILABLE.

The methods of propagation of tree seeds and of the young trees has been studied out and we are supplied with men who know just how it is to be done.

One of the ablest of these, Mr. Haughs, of the local Government Forestry Service, an educated forester, has spent the last twenty years of his life in studying the subject and his services are now available free to everyone, private, individual or corporation, who wishes the benefit of his advice on the ground as to what to do and how to do it.

All that is lacking is the desire to act and the carrying of the desire into effect.

SECOND. THE LUMBERING POLICY OF THE TERRITORY ON WATERSHED AS DISTINGUISHED FROM NON-WATERSHED FOREST AREAS.

The government owns a large area of forest land back of the Hilo District.

This forest contains large quantities of both Ohia and Koa timber.

This forest also is located upon one of the principal watersheds of the Territory, the entire town and District of Hilo obtaining their water supply from this source.

Early this year an application was made to the government for permission to cut timber from this forest.

The fact that, with the approval of the Superintendent and Board of Forestry, lumbering on a considerable scale in the Kau and Kona Districts of Hawaii had recently been approved, gave much concern to those interested in the Hilo

water supply, for fear that consistency might require a like approval of lumbering in the Hilo District.

The Territorial Superintendent of Forestry, Mr. Hosmer, made an exhaustive study of the situation, and a report thereon to the Board of Forestry, recommending that the request be denied. The Board of Forestry adopted the reasoning and the recommendation of the report, and the Land Commissioner and Governor of the Territory have approved of the recommendation of the Board.

FOUNDATION PRINCIPLES INVOLVED.

I consider that the principles involved in the differentiation between the Hilo forest on the one hand, and the Kau and Kona forests on the other, lie at the foundation of the forestry question in this Territory, and, that if the policy as outlined in connection with this particular case can be established as the continuing policy of the Territory, it will far more than justify all the expense which the Forestry Department of the Government has heretofore caused, and be added cause for congratulation that the Territory has been so fortunate as to secure at the head of its Forestry Department an educated forester, representing the most advanced study and intelligence concerning the subject available in the United States.

Although the Forestry Department in Hawaii has not, as yet, much to show in the way of material returns, it is of immense advantage to the people of this Territory to have the principles upon which they should proceed, intelligently studied out on the ground and clearly expressed, so that the lay man may understand why it is good economy to lumber one section of the island forests and not to do so in another.

THE FACTS INVOLVED.

Mr. Hosmer's report brings out the line of demarcation between the watershed and the non-watershed territory so clearly, that all that needs to be further said in this connection is to make a few quotations from his report.

After describing the nature of the forested area, Mr. Hosmer says:

"All over the area are springs, pools and swamps that feed the various small tributaries to the Wailuku river and its several branches. Practically the whole drainage basin of this stream is on this land. * * * Very little is known accurately of the actual sources of the water in the streams or from which part of the forest they are most largely fed; but the indications are that from one-third to one-half of the water comes from the area of pure Ohia forest, while the remainder is the result of springs and swamps lower down.

These springs are dependent for their sustained and equalized flow on the protection afforded by the forest cover. * * *

"Having given the problem thorough and careful study, both on the ground and in its various relations, I cannot report favorably on the proposition to lumber this tract.

"My principal reasons for this decision are three in number.

PROTECTION OF WATER FLOW.

"FIRST: I BELIEVE THE GREATEST VALUE OF THE FOREST ON PIIHONUA TO BE IN THE INFLUENCE WHICH IT HAS ON THE BRANCH OF THE WAILUKU RIVER AND ITS BRANCHES, I. E., ON THE EFFECT THE FOREST EXERTS ON THE WATER AFTER IT REACHES THE SURFACE, BY EQUALIZING THE FLOW AND PREVENTING EXCESSIVE RUN OFF.

"In view of use and possible further development for water power, irrigation and even for domestic supply—especially in connection with the growth of Hilo town—I regard the Wailuku as one of, if not, the most important stream protected by a forest reserve in the Territory.

"It might be possible, if the work were done under careful restrictions, to remove some of the mature trees from the Piihonua forest without detriment to its water conserving qualities; but to make lumbering profitable the operations would have to be conducted on a large scale. This would inevitably involve the opening up of considerable areas in sections where A COMPLETE FOREST COVER IS MOST NEEDED. Such a policy on this particular watershed would be fraught with danger. It is a risk which I do not believe the Territory should take; for the money to be obtained as stumpage would in no way compensate for the injury that would result were the regular flow of the Wailuku river seriously interfered with. * * *

UTILIZATION OF TIMBER.

"Second: The forest policy of the Territory has been, and is, to create a chain of forest reserves that are essentially 'protection forests.'

"ON THE LEEWARD SIDE OF THE ISLAND, WHERE, BECAUSE OF THE ABSENCE OF RUNNING STREAMS WATERSHED PROTECTION DOES NOT FIGURE, I AM IN FAVOR OF UTILIZING THE MERCHANTABLE TIMBER. BUT ON THE WINDWARD SIDE OF HAWAII I BELIEVE THAT THE FOREST

IN THE SEVERAL ESTABLISHED FOREST RESERVES, SHOULD, FOR THE MOST PART, BE KEPT INTACT, AT ANY RATE FOR THE PRESENT. * * *

"Third: My third reason is from a professional standpoint.

"Forestry rests on a business as well as on a scientific basis.

"In the consideration of such a problem as the lumbering of the Piihonua forest, the factor of whether or not it would pay is an essential one.

"Even were it desirable that lumbering should be permitted, it would, in my judgment, be necessary, in order to safeguard the favorable conditions of stream flow that now exist, to load the contract with stringent regulations as to the area to be logged, the methods to be used and the subsequent treatment of the tract."

Mr. Hosmer concludes that in the instance under consideration these regulations would leave no margin of profit for the contractor, and that, therefore it would be unjustifiable to recommend foresting under conditions which could not result in profit.

THE IMPORTANT FEATURE.

THE IMPORTANT FEATURE IN THE POLICY EMPHASIZED BY THE FOREGOING REPORT IS THE RADICAL DIFFERENCE BETWEEN THE FORESTS WHICH ACT AS A REGULATOR OF THE FLOW OF WATER AND FORESTS FROM WHICH THERE IS NO WATER FLOW.

Whether forests affect climate, especially rainfall, or not, is a disputed point.

My personal belief, based on personal knowledge of a large part of this Territory, is that it does have a strong effect thereon in many parts of this Territory.

There is, however, no dispute, and can be no dispute that a thick forest cover not only helps, but is absolutely essential to the maintenance of an even flow of water from a given water producing area.

I go further and claim that a forest on a water producing area in this Territory, with its heavy rainfalls and short watersheds, is absolutely essential to any economical flow of water at all.

HAWAIAN WATERSHEDS ARE SHORT.

The Hawaiian streams, which furnish water for irrigation and other economic use, all rise in forest areas with watersheds of from five or six to less than thirty miles in length.

It requires no scientific study or reasoning to demonstrate

that water flowing upon an area of land averaging not over 12 to 15 miles in length and on a grade of from 5 to 50 per cent., will not hold water for more than a few hours after rainfall has ceased, unless there is not only a forest, but a thick jungle of ferns, moss and debris to prevent its rushing in a torrent to the sea.

The forest is not enough under such circumstances. There must be a subsiduary growth of small trees and shrubs; under that a growth of ferns and creeping vines and in addition to that an undisturbed matting of leaves, sticks and moss creating a mass of material so thick as to hamper and almost prevent the flow of water. Once a clearing is made sufficient for the water to wear a course for itself and the heavy torrential rains, with the steep grade, will cut innumerable water courses to the sea, denuding the land of soil and draining off the water supply.

The almost constant standing water and semi-swampy condition existing in Hawaiian water-producing forests is essential to the very existence of this character of forest, as the existence of this character of forest is necessary to the conservation of the water supply. Neither can exist without the other.

Under these circumstances, any radical interference whatsoever with any portion of the forest immediately sets in motion a train of events which eventually destroys the whole.

In other words, it is my firm conviction, based upon fairly close observation extending over the last thirty-five years, that the forest growth on the water-producing watersheds of Hawaii must be, as far as possible, absolutely closed to interference, either by man or beast, or the result will be, in spite of all effort to the contrary, a doubly reacting disintegration of the forest, and diminution and final destruction of the area as an economic water-producing source.

NON-WATER PRODUCING FORESTS.

In marked contrast to this, as brought out by Mr. Hosmer's report, is the Hawaiian forest which does not cover a water-producing area.

Here there is no water flow to complicate the question.

There is not only no water to conserve, but the natural growth of the forest, being more open, does not require the careful protection which the forest growing in a semi-swamp does. The undergrowth is hardier and recovers more easily than it does in the water-soaked section.

With proper care, the mature trees can be removed, not only without radical damage to the remaining growth, but to the advantage of the younger growth; and by opening up the under vegetation, gives opportunity for seeds to start and

saplings to reach the light, which otherwise would fail to germinate or die for lack of room.

It becomes simply a question of intelligent lumbering; the making of the forest a revenue-producer through the medium of lumber instead of through the medium of water.

The principle involved in both cases is the same, viz: the causing the soil to produce that which will be the most value to mankind. In the water-producing area that which can be produced of most value is water. In the non-water producing forest that which can be produced of most value is timber.

How to intelligently lumber forests, is a question which has had expert study of a high class in most European countries and to which great attention is now being paid in the United States. There is no mystery about it. It simply consists in intelligent application of common sense to local conditions. This has been done in Europe and is being done in the United States. It has practically never yet been done in Hawaii.

WHAT FOREST RESERVES MEAN.

Popular opinion in Hawaii largely conceives of a forest reserve, as an area which is locked up and removed from profitable enterprise.

As a matter of fact, in the case of water-producing forest, it is a devoting of the land to the production of that which is of the most value to the people of the Territory, viz: water.

In the case of non-water producing forest, it means, not locking up from profitable use, but protecting the forest from destructive agencies, so that it can be made profitable, which now it is not, and, with a few exceptions, never has been; and, unless the methods of lumbering and reproduction evolved by study in Europe and the United States are applied here, never will be.

In other words, the most valuable crop which can be produced in a water bearing forest, is water. The most valuable crop which can be produced in a non-water producing forest, is timber. Whatever will most effectively accomplish these results in the respective cases, is in the public, as well as private interest, and should be done.

THE MAHOGANY LUMBER COMPANY.

(3). THIS NATURALLY BRINGS US TO THE CONSIDERATION OF THE EXTENSIVE OPERATIONS NOW BEING UNDERTAKEN BY THE HAWAIIAN MAHOGANY LUMBER COMPANY.

The proposition that Hawaii possesses forests which can produce railroad ties by the million, has come as an intense surprise to all but a very few in Hawaii.

The fact that ties can be produced and exported at a profit has come as a surprise to everyone. The only possible explanation thereof is the practical lumber famine which is now upon the United States and so graphically described in the official reports above quoted from. This shortage has for the first time made it possible to bring home to the people of Hawaii, in cold dollars and cents, that forest production and lumbering can be made an important industry in this Territory.

The fact that nearly three million standard railroad ties are to be exported from the Territory within the next five years has produced much solicitude and adverse comment among those who have not studied the question. Within the past month I have repeatedly heard the statement made that this contract was a bad thing for the Territory as it would not only denude the forest but exhaust the entire local supply of timber.

WHERE THE TIMBER WILL COME FROM.

So far from this being the case, the fact is that almost this entire contract will be filled with timber cut from the arable lands of the Olaa and Puna Sugar Companies, which, in ordinary process, they are clearing for the cultivation of sugar cane.

Heretofore the timber cleared from similar lands has been removed at large expense and burned on the ground to get rid of it.

Under this contract the timber will be removed at no expense to the plantations and a handsome stumpage will be paid to them instead.

Just how much more Ohia there is available for lumbering cannot now be definitely stated, without much more careful examination than has heretofore been given to the subect, but it is entirely conservative to say that there is ten times as much more available Ohia as that involved in this contract without in any way interfering with water conserving forests.

Comparatively little of the Ohia forest available for lumbering is suitable for cultivation. The great bulk of it is on land so rocky or so steep, or at such elevations as to make agriculture impracticable for any products now known to be profitable.

In consequence of this fact the great bulk of the Ohia forest land will continue to be forest land. Whether they will continue to produce only Ohia timber is a question which the future must determine, after intelligent study by forestry experts has been given to the subject. It may very well be that it will pay to substitute the slow growing Ohia tree, as

the mature Ohia forest is removed, with the quicker growing hardwood trees which are so easily propagated here.

NO FEAR OF FOREST DESTRUCTION.

The people of Hawaii need have no fear that the present move to make valuable the heretofore waste forests of Hawaii, is a move toward denudation of the forest and the carrying on of the policy of forest destruction which has heretofore prevailed so generally.

The one railroad tie contract above referred to means that there will, within the next five years, be brought into this Territory approximately two and one-half million dollars in gold coin which, but for that contract, would never have come here.

It means that this contract will demonstrate that lumber production can be made one of our leading industries. This is with the proviso, however, that such lumbering is done under intelligent supervision and is followed up by intelligent care of the area lumbered, looking toward the protection of the young trees remaining and the propagation of additional trees.

The outlook is full of hope in this connection, for the operations of the Mahogany Lumber Company, not only in connection with its lumbering of Ohia ties, but of the Koa forests, is being consistently carried out, both on the part of the forest owners and of the lumbering company, under the direct supervision and advice of the Superintendent of Forestry and subject to the rules and regulations of the Board of Forestry.

THE RUBBER INDUSTRY.

(4). THE RUBBER INDUSTRY AS RELATED TO FORESTRY.

Systematic rubber planting in Hawaii as an industry was begun three years ago, but until this year there have been no systematic tapping of trees and keeping of statistics of yield, on which to base commercial calculations of the profitableness or otherwise of the business.

During the past year under the direction of Jared Smith, chief of the Federal Agricultural Experiment Station in Hawaii, a number of mature rubber trees growing in the Territory have been tapped and statistics kept of the yield. The results are not yet available for publication but sufficient has been learned to make it certain that rubber production will be profitable in this Territory under existing conditions.

This fact has been accepted to the extent that there are

already five incorporated companies planting rubber on a considerable scale, besides a large number of individuals planting on a small scale. There have already been planted in the Territory between five and six hundred thousand rubber trees. The first tapping on any scale will take place next summer.

FORESTRY AND THE PLANTERS' ASSOCIATION.

From the standpoint of a profitable industry there is great hope in rubber, especially as, although the trees require good soil, they can be grown to advantage in patches scattered through the many small valleys which are found in all the mountain sections of the Territory. The business will therefore not only be of value in creating a new profitable industry, but will incidentally assist in reforesting the islands, especially where, by reason of inaccessible or smallness of area, it probably would never pay to plant for lumbering purposes.

Intelligent advice should be sought as to where and when to plant rubber trees, as they will not grow well at either the elevations or under rainfall conditions where many other trees will do finely.

There are unquestionably, however, large areas which are unfit for general cultivation, which should be reforested, and where rubber trees will do as well, and be more profitable, than any other tree which can be planted there.

The local Federal Agricultural Station has issued bulletins upon the subect of rubber culture and is about to issue another one.

The Territorial Agricultural Forestry Department has also interested itself in the matter; is furnishing rubber seed at approximately cost to all who desire it, and is prepared to give expert advice and suggestions as to locations and methods of planting.

RUBBER AS INCIDENTAL TO SUGAR.

There is no reason why, incidentally, a number of sugar plantations, especially those in the non-irrigated windward districts, should not, at slight expense, plant large numbers of rubber trees in gulches and other localities unsuitable for cane, resulting in a benefit by present reforesting; and ultimate profit from the rubber product which, if present prices prevail and the expectations of those who have made a study of rubber are fulfilled, will eventually be greater per acre than is even sugar.

The concrete results of next year's tapping of the trees at Nahiku will be watched with eager interest by all interested in the development of Hawaii.

RUBBER AS A REFORESTING AGENT.

Altogether 1907 has been a memorable year in the history of forestry and forest products in Hawaii. Whether the events of the year shall be taken to heart and made available for the beneficial progress of the Territory, either through the medium of public or private enterprise, depends largely upon the intelligence and energy of the members of this Association.

In the past the subject of forestry has been largely treated by this Association as an interesting incident, but not as one of direct concern or of possible immediate benefit or profit to its members. Within two years I have heard of trees bounding fields being cut out because the shade injured the adjoining cane.

In all earnestness I urge upon the Association that the time for this view of forestry and its possibilities in Hawaii has past, and that the preservation, propagation and utilizing of forests and forest products should from this time forth be made one of the leading features of the efforts of the Planters' Association, both by it as an organization, and through the individuals and corporations which give it its strength.

Respectfully submitted,

LORRIN A. THURSTON,
Chairman Committee on Forestry.

PROGRESS OF FORESTRY IN HAWAII DURING 1907.

By Ralph S. Hosmer,
Superintendent of Forestry of the Territory of Hawaii.

Members of the Hawaiian Sugar Planters' Association:

Gentlemen: Following the precedent of former years, the chairman of your Committee on Forestry has again asked me to appear before the Association with a statement of the progress of forestry in the Territory during the past year. This I am glad to do, for the Hawaiian Sugar Planters' Association is one of the forces that is always to be counted on for active coöperation and support in the furtherance of forestry in the islands.

Forest work in Hawaii naturally divides itself into that carried on by the Territorial Division of Forestry and that done by private individuals and corporations. It may be treated accordingly.

FOREST RESERVES.

In the activities of the Division of Forestry the creation of forest reserves continues to hold chief place. Since the last meeting of this Association, three additional forest reserves have been declared, as follows: Lualualei on Oahu, Hana on Maui, and Na Pali-Kona on Kauai. The area of government land in these reserves is, respectively, 3,743, 13,767, and 40,650 acres, or a total of 58,160 acres. Within the boundaries of the Hana Forest Reserve are also 1,058 acres of privately owned land; within the Na Pali Forest Reserve 19,890 acres are in private ownership.

Other forest reserve projects now awaiting final action are the proposed West Maui Forest Reserve, containing a total area of 44,440 acres; the proposed Makawao Forest Reserve, also on Maui, 1,796 acres; and a section of the land of Honouliuli, Oahu, which will make with the areas already set apart on that range a good sized forest reserve on the Waianae Hills. Within a short time the boundary of the proposed Kohala Mountain Forest Reserve will be located on the ground, when this project can be acted upon.

Each of the forest reserves set apart during the past year is made with the idea of protecting the forest on the watersheds of streams important for irrigation, power development or other use. They are all essentially "protection forests" and as such it is desirable that the forest within their boundaries be kept strictly intact. The same statement holds true of the projected reserves on Maui and on the Kohala Mountain.

Change in the Forest Reserve Law.

At the last session of the Legislature, during the spring of 1907, a very important step in forest work was taken when the forest reserve law was so amended as to permit the Governor to set apart government land within the forest reserve boundaries, whether it is under lease or not. It is specifically provided that such action shall be subject to existing leases, but being set apart, at the expiration of the lease the land automatically comes into the class of land definitely reserved. The advantage of this is that it leaves no uncertainty as to what the government's policy will be in regard to given forest tracts. It also makes for permanency in the management of the various reserves.

FOREST UTILIZATION.

During the last year and especially during the last two months much interest has been awakened in the subject of the utilization of the Hawaiian forests for Koa lumber and Ohia Lehua railroad ties. This development of what promises to be an additional industry to the Territory deserves special comment for it involves questions of forest policy of vital importance.

Two Classes of Forest.

It is perhaps pertinent at this juncture to consider certain essential differences between the two main classes of forest in Hawaii. As I have pointed out in previous reports the primary importance of the Hawaiian forests lies in their value as a protective cover on the watersheds of the streams of the Territory, of which the water is needed for irrigation, power development, domestic supply and other uses. In practically all of the forest reserves on the windward side of the islands, or in districts where the reserve protects permanently running streams or springs, the forest cover should be kept intact, in order that the forest as a whole, including both the trees of the main stand and the shrubs and smaller plants of the undergrowth, may exercise to the full their function of retarding the run-off and thus helping to maintain a moderately even flow in the streams. For this reason I reported adversely, last July, on a proposition to lumber the forest on the government land of Piihonua, Hawaii, in the Hilo Forest Reserve, on the ground that the opening up of the forest on that land would be detrimental to the favorable conditions existing on the drainage basin of one of the most valuable streams in the Territory—the Wailuku River.

The Commercial Forest.

On the leeward side of the islands, however, and in districts where because of topography and other factors there is no permanently running water, a quite different condition obtains. Here the commercial value of the forest takes first place in an estimate of its worth. Especially is this true of Hawaii and particularly of the Kona District, although it also holds good of sections of Kau and Puna. It is hardly necessary to remark that in the utilization of the forests in these districts the work ought to be done with due regard to the future. Except in localities where it is obvious that the land can be used to better advantage for other purposes than growing trees, the indication is for methods of conservative lum-

bering, whereby the mature trees of merchantable value now on the land may be removed in such a way that the forest will be left in good producing condition, which will in time permit the harvesting of other crops. Fortunately for the Territory the owners of the large private estates are alive to the importance of handling their forest properties in accordance with the methods of practical forestry, so that there is every reason to expect that the major part of the lumbering done will be carried on in a systematic and carefully planned manner. This being the case the advent of this new industry is to be welcomed as a development of much importance to the Territory.

TREE PLANTING ON WASTE LANDS.

Outside of the work in connection with forest reserves the energies of the Division of Forestry during the past year have been mainly directed (1) toward coöperative assistance to individuals and corporations desiring to plant trees and (2) to the introduction of exotic trees and shrubs of value to the Territory. Under its offer of assistance to private owners the Division of Forestry stands ready at all times to prepare planting plans for persons desiring to establish groves or plantations of forest trees, or who wish to do other forest work. This matter should be of peculiar interest to the members of this Association for there is hardly a sugar plantation on the islands but that has some areas of waste land that might well be devoted to the growing of trees. With the increasing scarcity of fuel that is being felt in many districts and with the steady rise in price of the lumber needed for various uses on the plantation, it needs no argument to show the advantage of a local supply, even though it meets only a part of the demand.

A number of the sugar plantations on each of the islands have undertaken and are carrying on tree planting work, but there are many areas of waste land that still wait to be made productive. The offer of the Division of Forestry to assist in this work, is a standing one; the members of the staff are ready at all times to undertake the work.

PLANT INTRODUCTION.

In the introduction of exotic plants the past year has seen marked progress. Through the exchange of Hawaiian grown seed of native and introduced plants, seed of many valuable trees new to the islands has been received. This seed is being started at the Government Nursery. In due course the trees resulting will be planted out in suitable situations where they can be carefully watched; those that are found to be of value

will eventually be propagated and generally distributed. The results of this work can but be of value to the Territory.

Another item of considerable interest in this connection is the inauguration of systematic experiments with temperate zone trees—pines, spruces and firs—on the higher slopes of Mauna Kea and Haleakala. This work is done with the coöperation of the Federal Forest Service, from whose appropriation for this fiscal year an allotment of two thousand dollars has been made for this purpose.

RUBBER.

The rubber industry of the Territory continues to develop with every sign of promise. It is as yet too soon to regard it as fully established but everything points to the time when rubber will take its regular place as one of the important "allied industries." Perhaps the most notable event of the year in connection with rubber was the successful convention held at Nahiku in October, 1907,—"the first rubber convention ever held on American soil" as the papers had it—when was organized the Hawaiian Rubber Growers' Association, with the object of providing an organization which it is hoped will benefit the rubber industry in somewhat the same way that the Hawaiian Sugar Planters' Association has benefitted sugar.

To sum up: The past year may well be considered one of progress in forestry in Hawaii, for while the things actually accomplished may not in themselves be striking they nevertheless play an important part as units in the building up of the structure on which we are all at work, the development of the general prosperity of the Territory.

LECTURE ON CANE-BORER.

By F. W. Terry.

Mr. President and Gentlemen:

I have a few remarks to make this afternoon on the Cane-Borer. The term "Borer" as used in these Islands is generally applied to the Beetle Borer. In other cane countries, however, there are numerous other borers, many of them being of a totally different nature to that of ours. Many of these borers are the larvae of moths, such as the moth borers of the West Indies, Java and British Guiana. Our own pest is known to exist in the following localities: Queensland, Fiji, New Guinea, New Ireland and Tahiti, and it will probably be found on several other islands of the Pacific as researches are continued in that direction. Although sugar cane is its principal food supply, ba-

nanas and palms are also attacked. Mr. Koebele found it a serious pest on the above plants in Fiji, and several cases of attack on these Islands have been recorded by them on the royal and native palms. From these facts there is every indication that its original food was not cane, this plant having become a comparatively recent addition to its diet.

Most of you are so familiar with the adult that a detailed description is unnecessary. It will perhaps be better to start with a description of the egg. This egg is ivory white, narrowly oval and slightly curved, and enclosed in a thin, tough membrane. It is usually about one-fifteenth of an inch long. It is placed singly, usually about one-eighth of an inch or less beneath the cane rind, or it may be placed within the cane leaf-sheaths. Less frequently it may be found in the walls of the old disused larva borings. The incubation period covers about six days. The young larva upon hatching is quite white, and the head is also colorless. You are all familiar with the later stages of the larva, with its characteristic hard reddish head and strong jaws. This hard material is technically known as chitin, and composes the general covering of all insects, notably the horn-like covering of beetles, and also the wings and scales of moths, the hairs of caterpillars, etc. Soon after the yong larva has emerged this chitin begins to harden and it becomes yellow, but it is not until some time has elapsed that the jaws are hardened sufficiently to allow it to commence feeding. I would call your attention to the valve-like organs on the body segments. These are technically known as spiracles. They are a part of the respiratory system and are connected with internal air tubes, thus bringing air to the blood system. I might mention that insects do not breathe through the mouth. It is impossible to drown an insect by merely immersing its head, since as I mentioned just now, the entire respiration is carried on by means of these spiracles, although in some aquatic insects one frequently finds gill-like structures also.

The larva, as soon as it begins to feed, proceeds to work its way into the inner tissues of the cane-stalk, and invariably takes an upward direction, judging from experiments made. It is a voracious feeder and grows rapidly, molting its skin and the covering of its head several times. The exact number of molts has not been definitely ascertained, but it is probably about six. As the larva tunnels its way, large quantities of food material are defaecated and block this passage. Although a large percentage of this sawdust-like material has passed through the digestive system of the larva, a great deal of the plant tissue has been merely masticated in order to express the juice. This material also serves a useful purpose in protecting the helpless larva from possible enemies. Having become fully fed, the larva approaches the rind, eating out a well defined hole sufficiently large to enable it, when a beetle, to escape. The period occupied in the

larva stage varies from seven to twelve weeks, according to the temperature and condition of the food. Having prepared this hole it retreats, and proceeds to construct a tough cocoon, composed of strands of cane fiber wound spirally and kneaded compactly together. In this cocoon a very remarkable change now takes place. The whole of the organs, both internal and external, become metamorphosed, and we have instead of the shrivelled larva a form closely resembling the future beetle. This is the pupa, and at this stage most of the external organs of the future borer can be traced. As you will observe, the future wing-cases and legs are carefully folded upon its sides and breast, and the head, legs and body are ensheathed in a semi-transparent membrane, which splits off when the pupa has developed. The pupa at first is of a pale creamy white and quite soft, but as time goes on its outer integument hardens and darkens, developing the characteristic markings of the borer beetle. The period occupied in the pupal stage is nearly two weeks. At the end of this period, however, the freshly formed beetle is still too soft and weak to escape, and it remains for another two weeks before it is fully mature, when it emerges as our too well-known male or female borer.

You are all so familiar with the sexually matured beetle that a few brief remarks on this stage will suffice. Quite a marked sexual difference is apparent in the form of the beak or rostrum. In the female this is more slender and curved. That of the male, as you will observe, being much stouter and rough beneath. The tip of this beak bears a pair of well developed toothed jaws, which work sidewise, and enable the female borer to prepare the hole for the reception of her egg. It is very interesting to watch this process, which possibly some of you may have done. Having placed herself between the stem and leaf-sheath, (the sheath acting as a fulcrum for hr body), she proceeds to eat out a narrow curved passage, usually about the length of her beak. The preparation of this varies according to the hardness of the rind, but is usually not more than two months. The cavity having been finished, she now completely reverses her position, bringing the extremity of her abdomen over the hole. From this extremity she inserts a telescopic organ known as the ovipositor, carrying with it her eggs which she places at the bottom of this cavity. She then withdraws her ovipositor, and is ready for further egg laying.

As the majority of you are aware, the borer is possessed of a pair of powerful flight wings. These membraneous organs are composed of chitin, and strengthened by thickened veins. When at rest these wings are folded up beneath the hard wing-cases.

I might call your attention to the structure of the foot. This, as you will observe, is jointed, and bears at its extremity a pair of pads. The under surface of these foot pads are covered with a dense growth of short, flatened or spatulate hairs. These hairs

are also covered with a stick secretion. It is by means of these pads that the beetle, as you have probably noticed, is enabled to walk with perfect ease over the smoothest cane surface or up the side of a glass bottle.

No definite knowledge is at present available as to the life period of the beetle after leaving its pupa case. Mr. Koebele suggests that the time extends from ten to twelve months, half of which time a female may lay four to eight eggs daily, but this is somewhat problematical. Of one thing we are certain, however, and that is, the period occupied from the laying of the egg to the emergence of the mature beetle is from three to three and a half months.

I will now discuss a few methods of prevention adopted here and elsewhere. The commonest and most practical method at present available is that of gathering the adults by hand. This work is usually done by women or children, and is largely regulated by labor and other conditions. Objections are often raised to this process among the managers, who claim that much damage is done by the breaking down of suckers and injury to the stems. This is naturally the case, where careless and too hurried work is allowed. Even if this should happen, the capture of one capable egg-laying female alone per stick (which is a low estimate for the average infested field) will probably save dozens of others. The usual method of payment appears to be per ounce, or per hundred borers, but one manager informed me that this method he found conducive to careless work, and this method of remuneration was therefore changed to per diem with satisfactory results. I might mention, although the usual rate of reckoning is at three hundred borers per ounce, I find that three hundred and ten per ounce is more accurate.

It will not, perhaps, be out of place to mention that males appear to be much in excess of females. Mr. Koebele's experience during February of 1899 showed an excess of forty males per hundred, while from my own examination during August and October of this year, males were found to be in excess to the extent of twenty per cent.

Another method of destruction adopted here, and to a large extent in Fiji, is that of bait. This consists of split sticks of cane, bord or otherwise, which are placed in small heaps around the infested fields. As you are doubtless all aware, the borer is readily attracted to fermenting cane, and by this means large quantities can be obtained. In Fiji by the adoption of this method Mr. Koebele was able to gather, aided by seven little Indian girls, 16,000 beetles in about four hours. This amount will show you the effect of such a method under certain conditions. Two objections to the effectiveness of the method here are, first, the extremely numerous ants on these plantations, and second, the usually much dried atmosphere. This latter difficulty could, however, be partly overcome by placing the cane in irrigating

ditches and covering with gunny-sacking during the day and not removing it until late in the afternoon, the gatherers again visiting these sticks early in the morning.

No doubt the custom of burning the standing cane previous to cutting as described by Mr. Adams, must be responsible for the destruction of immense numbers of adults, but I do not think it would place a very heavy toll on the larvae, especially where their tunnels are central and the sticks large. It has been my experience,—and it has no doubt been yours also,—frequently to find larvae alive in sticks which have recently passed through a trash fire, and this is more especially the case with the stools. In fact, where the area is badly infested, it is advisable to dig up the stools and reburn them with the aid of kerosene or other inflammable medium, or even to repeat this process a third time.

The much disputed question of stripping becomes closely involved with the borer problem. Its cultural and economic standpoints I am not in a position to criticise; but in spite of what was stated yesterday to the contrary, I am still of the opinion that if within an infested area you have two fields of identically the same growth and conditions, one stripped and the other not, you would find the borers most abundant in the un-stripped portion.

Both larvae and adult borers are extremely tenacious to life, and appear to stand drowning to a remarkable degree. From experiments made, larvae were found to survive after complete immersion of twenty-seven hours, and adults seemed none the worse after an immersion of twenty-four hours. Other experiments were made in order to ascertain if borers would enter the soil to reach seed cane. A number of jars were prepared for this purpose, seed cane being carefully covered with soil at depths varying from a half to three inches, food being also placed on the surface. Borers very readily entered the half inch soil, and evidently oviposited, since larvae were bred later. This experience, of course, does not prove that this occurs in the field, since as you are all aware, laboratory conditions are not quite natural.

Since some of you are familiar with the existence of a fungus parasite, I will now refer to this before concluding. Under certain conditions I have found during the last three years both adults and larvae destroyed by a parasitic fungus. The identification of this fungus has not been definitely settled, and it is still undergoing an examination in the Pathological Division of the Station. If it should prove to be identical with the Japanese beetle fungus, this fact would indicate its practical ineffectiveness as a death factor, for as we all know, a considerable period has elapsed since that fungus was first utilized in these Islands, and it should have demonstrated its effectiveness on the borer, more fully than my own and the experience of other entomologists can prove.

I think this is all I have to say to you this afternoon. Thanking you, gentlemen, for your patience and attention.

LECTURE ON SUGAR-CANE LEAF-ROLLER AND ITS PARASITES.

By O. H. Swezey.

Those of you who have had fields of cane infested by the leaf-rollers are probably already enough familiar with the pest; and those of you who have not, probably are not much interested in them.

However, it may be well to emphasize or further explain a few points in my recent Bulletin on Leaf-Rollers.

So far, but one species of leaf-rollers has become a pest on sugar cane, although of several other species which feed together with the cane leaf-roller upon various grasses an occasional specimen has been found feeding on sugar cane. In a state of nature each insect usually has a definite food plant or food plants, or in the case of predaceous or parasitic insects, they restrict themselves more or less definitely to certain hosts. But when civilization changes the nature of a place, insects frequently change their normal habits and adapt themselves to new food plants, and often become pests. Thus, one of the four species of native grass-feeding leaf-rollers has become a pest on sugar cane. I know of no reason why the other three have not done so, or might not do so in the future, although, as previously stated, none of them have been found in cane so far except an occasional sample.

Briefly, the life history of the sugar cane leaf-roller (*Omiodes accepta*) is as follows:

The eggs are laid in a row, usually in groove of midrib on upper surface of leaf, and slightly overlapping. They are not readily found unless the moths are very numerous in a field. The eggs hatch in a few days after being laid. The young larvae eat small spots from the surface of the leaf at first; later, when larger grown, they eat the whole substance of the leaf. The larvae of moths and butterflies are usually called caterpillars, especially those of the larger species. The caterpillars of the leaf-rollers related to the cane leaf-roller are similar in certain respects, but they differ in regard to black markings occurring on the head and on the tubercles of the body. The tubercles are flattish slightly raised places, regularly arranged, and each bearing one or more hairs. The characteristic arrangement of these black markings for each species is well known in the plates III and IV of my Bulletin. The life history of all are about the same.

The life of the caterpillar is about three or four weeks, it having molted five times during its growth, at intervals of two to five days. It then spins a slight cocoon in its "retreat" of a rolled-up leaf or in some other place of seclusion or safety, where it soon transforms into the next stage, the pupa. As shown, this is shorter than the caterpillar. It is cylindrical, tapering to the

posterior end, and the developing wings, legs, etc., are visible. In this resting stage it takes about a week to ten days for full development of the moth, which then splits the pupal skin along the back and crawls forth, at first soft, but soon their wings expand and they harden up, and the moth is ready for its activities. Several generations may be going on in a field at the same time; hence, all stages can be found at one time, usually, for breeding goes on for several generations each season, often throughout the year, or until the parasites get them checked.

This leaf-roller illustrates very well the way some insects are attacked by parasites. There are several native parasites, several introduced parasites, as well as some predaceous insects preying upon it, attacking it in all stages of its life cycle except the adult, which is probably not much preyed upon, unless slightly by birds.

Attacking the eggs is a tiny chalcid fly (*Trichogramma pretiosa.*) One to three of these develop to maturity within one leaf-roller egg. This is a very valuable parasite on eggs of many species of destructive moths in the United States. I can find no record of when Mr. Koebele introduced this species to these islands; but I have found it established in several of those districts where cane leaf-rollers are troublesome.

Attacking the caterpillars are several species of parasites, one of which is native, and the others are introduced. *Limnerium blackburni,* the native one, develops as a white maggot inside the caterpillar, and kills the latter when nearly full grown. It emerges from the dead caterpillar and spins a compact light brown cocoon on the leaf beside the latter, within the rolled-together leaf which the caterpillar had for a hiding place. The adult parasite emerges from the cocoon in about ten days.

Frontina archippivora is a Tachinid fly which lays its eggs on the body of the caterpillar. These hatch and the maggots enter the body, where they feed upon the juices of the caterpillar, the latter remaining alive until the parasitic maggots are nearly full-grown. When full grown they emerge from the dead caterpillar, drop to the ground, and burrow slightly below the surface, where they change to brown cylindrical-oval puparia, within which the final development of the fly takes place in about ten days.

Chaetogaedia monticola is another Tachinid fly somewhat larger than the preceding. Its larva develops in the caterpillar more slowly, so that the latter has spun its cocoon and pupated before dying from the effects of the parasitic maggots inside. The parasite maggot remains within the host pupa to form its puparium and to undergo further changes before becoming adult. These two Tachinid flies both occur in the United States, and it is not known how or when they were introduced here.

Macrodyctium omiodivorum is a small Braconid. It was probably introduced from Japan by Mr. Koebele, in 1895, though I can find no definite record of the date. It is the most valuable of all the parasites on the cane leaf-roller, and is to be found wher-

ever the latter are aboundant. I have found from 75% to 90% of the caterpillars destroyed by this parasite in several badly infested fields in different parts of the islands. The adult parasite is about ¼ inch in length. The female stings the caterpillar to paralyze it, then deposits eggs on its surface. I have found from one to twenty-two eggs on one caterpillar. They are white, and can be seen without a lens, by looking very carefully. They hatch in a day or two, and the tiny maggots bite into and feed on the juices of the caterpillar. They grow very rapidly, becoming full grown in three or four days; then spin cocoons in a cluster on the surface of the leaf near the dried-up remains of the dead caterpillar. In about a week the adult parasites emerge from the cocoon, or in about two weeks from the time the eggs were laid. It can be readily seen that they increase much more rapidly than the leaf-rollers, for several are nourished by one caterpillar, and the length of their life cycle is about ⅓ that of the leaf-roller; hence, they can produce three times as many generations in a given time.

The presence of this parasite is always easily determined in a cane field infested by leaf-rollers, even though the adults may not be seen, or if seen not recognized. Examine the rolled-up edge of the leaf, the "retreat" of the leaf-roller, which may be readily found in numbers; look for paralyzed caterpillars (they are always lively if they have not been attacked by this parasite), examine them for the eggs or larvae of the parasite somewhere on the surface; or the cocoons may be found in the "retreat" along with the dried-up remains of a caterpillar. When the parasites are found to have started, they should soon increase to such extent as to check the increase of the leaf-rollers.

Echthromorpha maculipennis and *Pimpla hawaiiensis* are two native Ichneumon parasites which attack the pupa stage of the leaf-roller. They pierce the rolled-up leaf wherein is the cocoon and pupa of the leaf-roller, and deposit an egg inside the pupa. The larva of the parasite grows inside the pupa and passes through all the transformations to the adult, finally gnawing a hole for its exit.

Chalcis obscurata is a Chalcid fly, introduced by Mr. Koebele from Japan and China in 1895 and 1896. It may be recognized by its peculiar and large hind legs. It is from ⅛ to ⅜ inch in length, varying with the size of the host; black, with yellow marked legs. This parasite also attacks the pupa of the leaf-roller, though probably sometimes the larva also. It is more valuable than the two previously mentioned.

Besides all the parasites mentioned, a large black native wasp (Odynerus nigripennis) is very useful in preying upon leaf-rollers. It catches them, paralyzes them, and stores them up in its nest for its young to feed upon. Its nests are in holes in rocks, banks, trees, boards, etc., and often they take possession of an old mud-dauber wasps' nest. In these latter they are more

readily examined, and the cells found full of caterpillars waiting to be eaten by the larvae of the wasp.

The cane leaf-roller is an illustration of what is so common among insects; namely, an attempt to conceal or protect itself from its enemies. Many insects are protected by their resemblance in form or color to the objects they live upon or frequent; others spin webs for protection; others surround themselves by some objectionable material, etc., etc., while there are many which, like the cane leaf-roller, fasten together leaves within which to hide. But it is seen that though the leaf-roller remains well hidden, yet several parasites have learned where to find him, and he is no more secure in his "retreat" of rolled-up leaves.

Furthermore, we have here an illustration of the effects of parasitization upon a pest. The parasites never exterminate a pest. They may often reduce the pest to very insignificant numbers, but not to extinction. That would result in the extinction of the parasite itself, in the case of those which are so exclusive in their diet as to have very few hosts; more especially if they have but one host. Take, for example, the introduced egg-parasites for the sugar cane leaf-hopper. They depend for their existence upon leaf-hopper eggs, and if the leaf-hopper were so completely exterminated that there were no more eggs, these parasites would also become exterminated. But the parasites will never do this. They may get the pest very nearly exterminated, but somewhere there will always be a few eggs which escape the parasite, and it may, indeed, frequently occur that a good many may, and that somewhere, where the parasites have themselves become very nearly exterminated, the pest may get a start and breed up rapidly before being again checked by the parasites; thus there will be a rising and falling of the balance between the parasite and the pest; sometimes one in ascendency, and sometimes the other.

In the case of the parasites on the cane leaf-roller, even though they kill such high percentages of the caterpillars, and get them much reduced, yet some escape to reach maturity, and these may migrate to other fields, or regions where they may be breeding for a generation or two before the parasites may find them and begin the work of checking their increase. Then, as the parasites increase, the leaf-rollers will decrease, until the minimum is reached again. This may continue indefinitely, season after season; as the leaf-rollers also apparently breed more prolificly during certain seasons, particularly the winter season.

Although these numerous parasites have not prevented the leaf-roller from being a pest at times, yet when it is known to what extent they prey upon the leaf-rollers one can realize that without them the leaf-roller as a pest would be vastly more destructive than at present.

I would further call attention to the fact that of all these parasites the ones which are of most value are those which have been

introduced, some of them by Mr. Koebele, and some probably accidentally, through the ordinary channels of commerce.

TREATMENT OF CANE CUTTINGS.

Mr. L. Lewton-Brain, Director of the Division of Pathology and Physiology of the Experiment Station, thereupon delivered the following lecture upon the subject of the "Treatment of Cane Cuttings":

Mr. President and Gentlemen:

When I was asked to give a short address at this annual meeting I at once thought of the subject of "The Treatment of Cane Cuttings" as being one of the most important practical questions in connection with sugar cane pathology.

A number of fungi are known to attack cane cuttings, the most important being the so-called "pineapple" fungus (*Thielaviopsis ethaceticus*) and the "rind" fungus (*Melanconium sacchari*). The pineapple fungus is the most destructive of all these parasites, and my remarks this afternoon will apply particularly to this fungus. The other diseases act, and are treated, in much the same way.

The pineapple fungus attacks the cuttings after they are planted in the soil. The rot nearly always starts at the ends of the cuttings, as it would appear that the fungus is quite unable to work its way through the rind of the cane. Once the fungus enters the soft tissues of the cutting, a race begins between it and the eyes of the cutting, both of them requiring for their growth the sugar and other foods stored away in the joints of the cane. Once the eye has progressed so far in its growth that it has attained an independent root system and leaves, it has no further need of the food supply in the cutting and cannot be further injured by these rots.

The object of any treatment is thus fairly obvious. We cannot hope entirely to prevent the rots entering the cuttings. But all we require is that the ends of the cuttings may be so treated that a certain amount of resistance will be offered to the entry of the fungi. In this way the eyes will acquire a certain start, before the fungus begins to destroy the food they require.

Certain properties are necessary in any substance that will be used for this treatment.

It is of primary importance that the substance used be efficient, that is to say, it must be destructive to the fungus which comes in contact with it.

Again the fungicide must be cheap. An expensive substance would not be practical to use in such large quantities as are necessary.

Thirdly, there must be easiness of application. However efficient and cheap a fungicide may be, unless it can be easily applied

it will be perfectly useless for the treatment of thousands of cuttings in a limited time.

Again the application must be sufficiently permanent to form a protection for the two or three weeks that elapse before the eyes become independent of the cutting.

Lastly, it is obvious that whatever dipping mixture we use must be without evil effects on the cuttings treated.

Now I will take some of the more important fungicides that could be used for this purpose, and we will see to what extent they comply with the conditions as stated.

1. Tar is a very efficient fungicide, as was well shown in our last year's experiments which were illustrated in the colored plates of Bulletin 5 (Plate IV). It is also cheap, extremely permanent and quite harmless to cane. Unfortunately, no easy mechanical means of applying it has yet been suggested and it would have to be applied by hand to the ends of every individual cutting.

2. Carbolic acid is an efficient fungicide, cheap and easy to apply. However, its effects are not lasting and in a day or two the cuttings would be unprotected.

3. Formalin is used in seed treatment of potatoes, wheat, etc. It is very destructive to fungus spores, but is rather expensive, not very pleasant to work with and above all, is very volatile, so that the protection after the cuttings were planted would be nil.

4. Lime-water is not efficient as a fungicide, and so can be ruled out at once.

5. Bordeaux mixture is the only fungicide I know of that satisfies all the conditions. It is quite efficient, cheap, fairly easily applied, permanent if properly made and applied, and quite harmless to the cane. Whether a better fungicide may not be invented in the future is a question. Bordeaux mixture is not perfect, but it is quite safe to say that it is extremely good and a long way the best fungicide for the treatment of cuttings.

In order that the treatment of cuttings may be successfully carried out two conditions must obtain. First the fungus must be present, and second, the cuttings must be free from disease. It is obviously useless to protect cuttings if they are not liable to be attacked, and equally obviously useless to treat cuttings which for any reason are incapable of germination.

It is fairly safe to say that the fungus is present in every field of cane in these islands. The second condition is not so easy to comply with, but it is quite as important and should be the first thing every plantation should aim at securing.

Whether it will pay any particular plantation to treat the seed cane is a question that cannot be answered off hand. It will depend on how closely the conditions approximate to one or other of these extremes. If there is a loss due to these diseases, I can safely state that the treatment we have recommended will, if properly carried out, reduce them to a minimum.